# Structural resource of the aircraft IAR-99 SOIM

Dorin LOZICI-BRINZEI*,[1], Radu BISCA[1]

*Corresponding author
*,[1]INCAS – National Institute for Aerospace Research "Elie Carafoli"
B-dul Iuliu Maniu 220, Bucharest 061126, Romania
lozicid@incas.ro, biscar@incas.ro

DOI: 10.13111/2066-8201.2012.4.1.6

***Abstract:*** *Aircraft structure fatigue monitoring has been developed over decades presently reaching the stage where it became mandatory for all combat aircraft to be equipped with an airborne fatigue monitoring system. These systems usually collect operational data for calculating the safe fatigue life or inspection interval for the aircraft structure. This paper presents an analysis of the current state of fatigue monitoring systems on the IAR-99 SOIM based on the experience of international fatigue monitoring programs and analysis of structure resource improvement.*
*Aspects related to strain gauge and calibration, flight parameter data gathering, data integrity, comparison with fatigue test results and fatigue damage models are also investigated by means of flight tests.*

***Key Words:*** *fatigue management, structural integrity of the aircraft, fatigue monitoring, lifetime estimating, combat aircraft, fatigue models*

## 1. INTRODUCTION

To analyze the IAR-99 SOIM aircraft resources the following activities are needed:

- Study of the lifetime extending opportunity by estimating a target (number of years) correlated with the number of flight hours, type of mission, etc.
- Development of the methodology for extending the physical resources of IAR-99 based on theoretical and experimental documentation used both at the national and international level.
- Analysis of the missions profiles and of the theoretical loads spectra (MIL-STD-1530), implicitly, used in fatigue tests for approval as compared to those effectively registered during operation.
- Analysis of the IAR-99 aircraft behavior in operation based on documents prepared during the regular works. Data on the IAR-99 aircraft structure behavior in operation (statistical data correlated to the number of flight hours).
- Appropriate selection of the non-destructive inspection methods according to parts or components and development of a series of programs for their execution.
- Fatigue calculation analysis for parts ensuring the structural integrity of the aircraft (the first class parts - fittings for the wing-fuselage junction, landing gear, engine mounting, elevator-stabilizer, rudder-vertical stabilizer).
- Identification (inventory) and analysis of the main points which may be damaged by corrosion (for instance the hydraulic and fuel circuit, junctions with different materials, etc.).

The structural design and stress calculation of the IAR-99 aircraft were made based on British Regulation Av.P - 970. In accordance with Regulation Av.P - 970, the stress provisions are applied to two load levels as follows:

(1) to extreme loads (ultimate loads) representing calculated operational loads (j = 1), factored by the coefficient of safety (ultimate factor) denoted by $j_u$;

(2) to limit loads (proof loads) consisting of calculated loads (j = 1), factored by the coefficient of safety (proof factor) denoted by $J_{pr}$.

The condition is that structural fails do not occur before reaching the level of ultimate load while deformations that may jeopardize the strength structure safety are not allowed to occur at the level "proof". According to ref [4] the IAR-99 structures must satisfy the following safety coefficient values:

$j_{pr} = 1.125$ ("proof"level)
$j_u = 1.5$ ("ultimate"level for the general structure)
$j_u = 1.725$ ("ultimate"level for riveted joints)
$j_u = 2.0$ ("ultimate"level for the removable joints elements)

In the past the inability of monitoring the loads of embedding wing using only a counter fatigue led to the development of loads measurement systems capable of recording first of all the wing root bending moment or WRBM. Strain gauges located near the wing root were installed to record the effects of weight changes as fuel is consumed and the weapons depletion during flight. Currently, a judicious location of strain gauges may consider these effects in various flight points that constitute the flight envelope. The location of these strain gauges must be chosen so that their signal to be influenced mainly by the largest load that causes wear and fatigue stress on critical considered locations. In particular it should be noted that the strain gauge must be calibrated for load that produces failures. Within the collaboration between CCIZ Craiova, INCAS Bucharest and STRAERO Bucharest, a program for analysis of the SOIM IAR-99 aircraft resource was developed. In this respect at CCIZ Craiova three flights were performed to determine a series of flight parameters.

The flight parameters may be used for:

* Strain gauges calibration
* Efforts validation and estimation when resource data are corrupted
* Aircraft usage statistics generation
* Significant loads setting

## 2. STRAIN GAUGE ASSEMBLY

Strain gauges were mounted on wing-fuselage junction fittings.

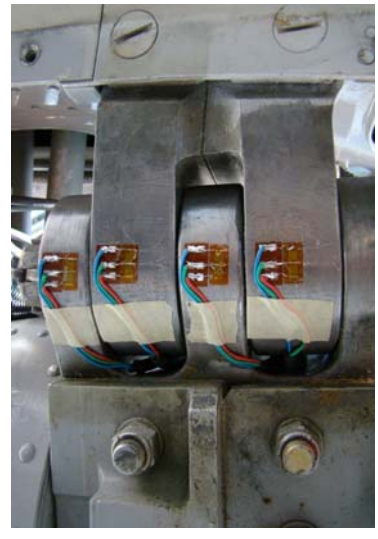

Fig. 2.1 Strain gauge mounting on the lower fitting of the wing-fuselage junction

# 3. STRUCTURAL GEOMETRY

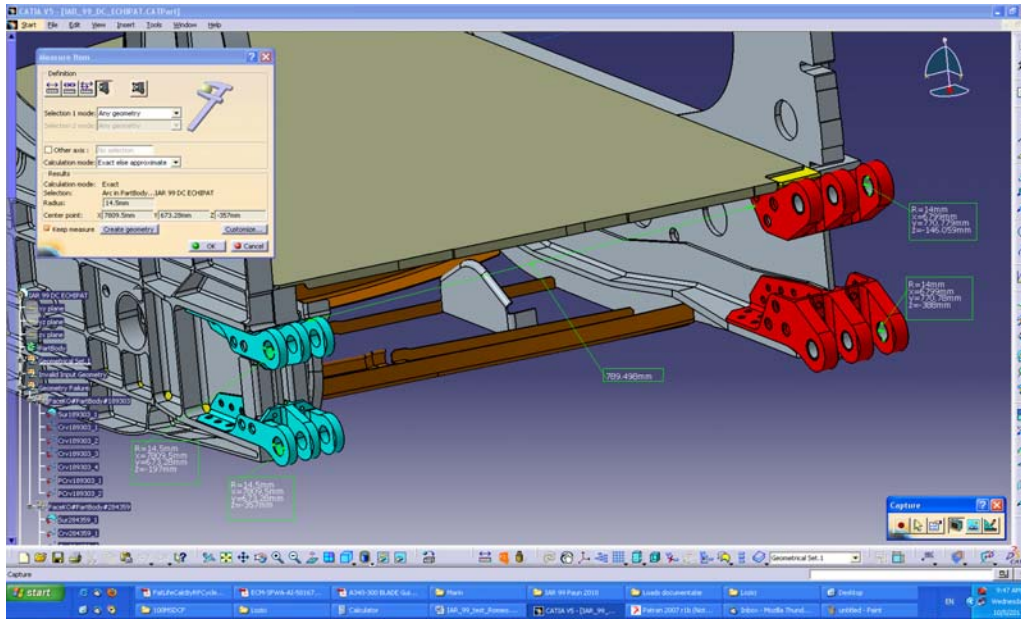

Fig. 3.1 Central fuselage-wing junction assembly (fuselage fittings)

The strain gauges were located on the wing-fuselage junction lower fittings for the following reasons:

- High calculated stress values
- Elevated recorded stress values in static tests
- Fitting eye breaking during a fatigue test
- Easy access to the strain gauges location.

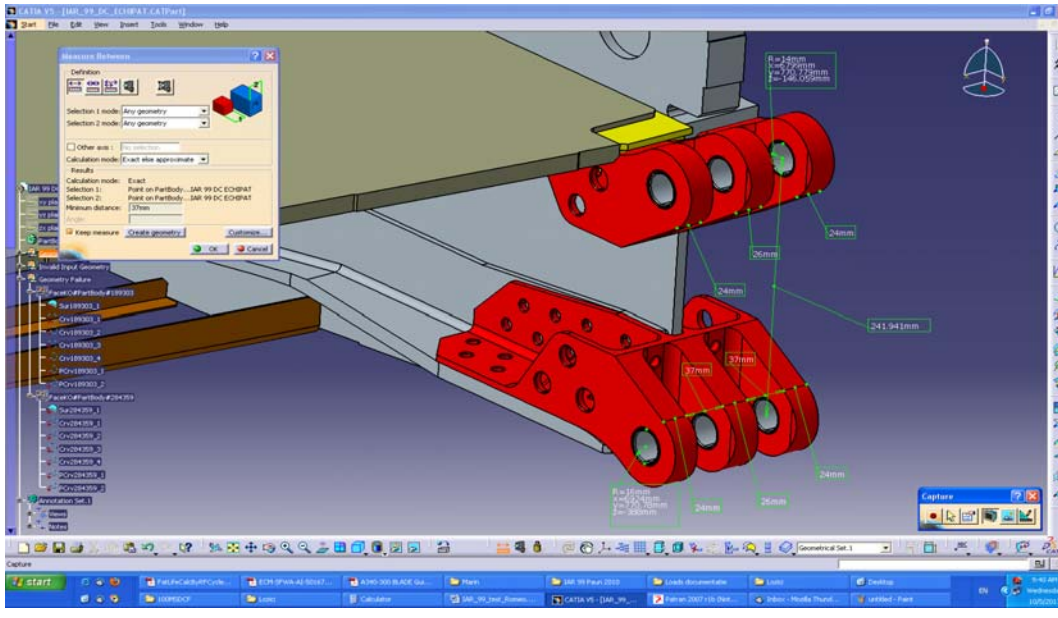

Fig. 3.2 Front, upper and lower fittings, central fuselage C 20

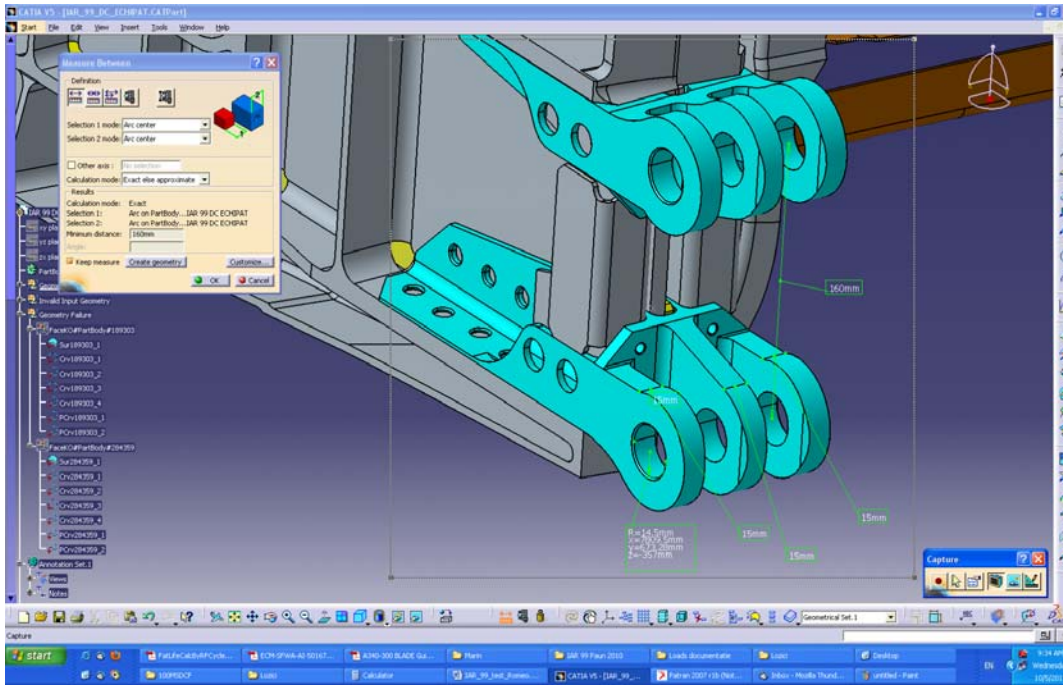


Fig. 3.3 Rear, upper and lower fittings, central fuselage C 24

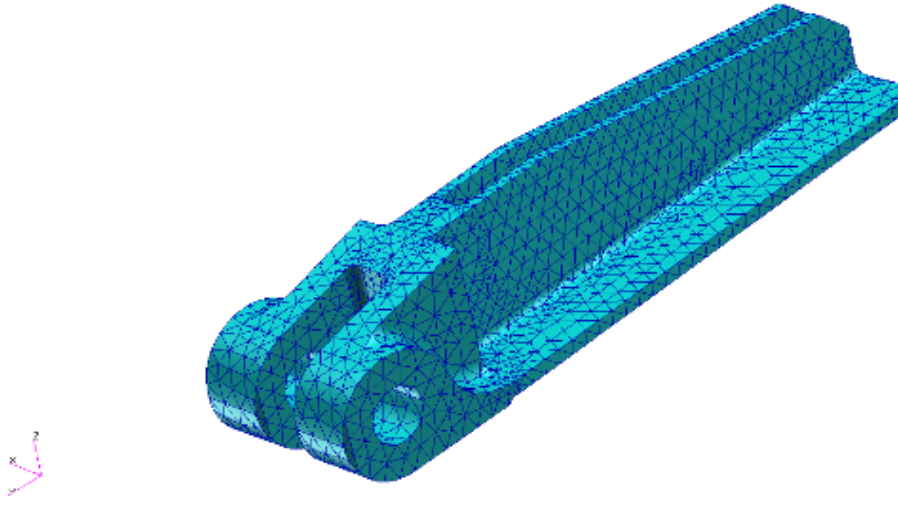

Fig. 3.4 Rear wing fittings

The static test simulation was performed using the FEM model (PATRAN & NASTRAN) presented in Fig. 3.5

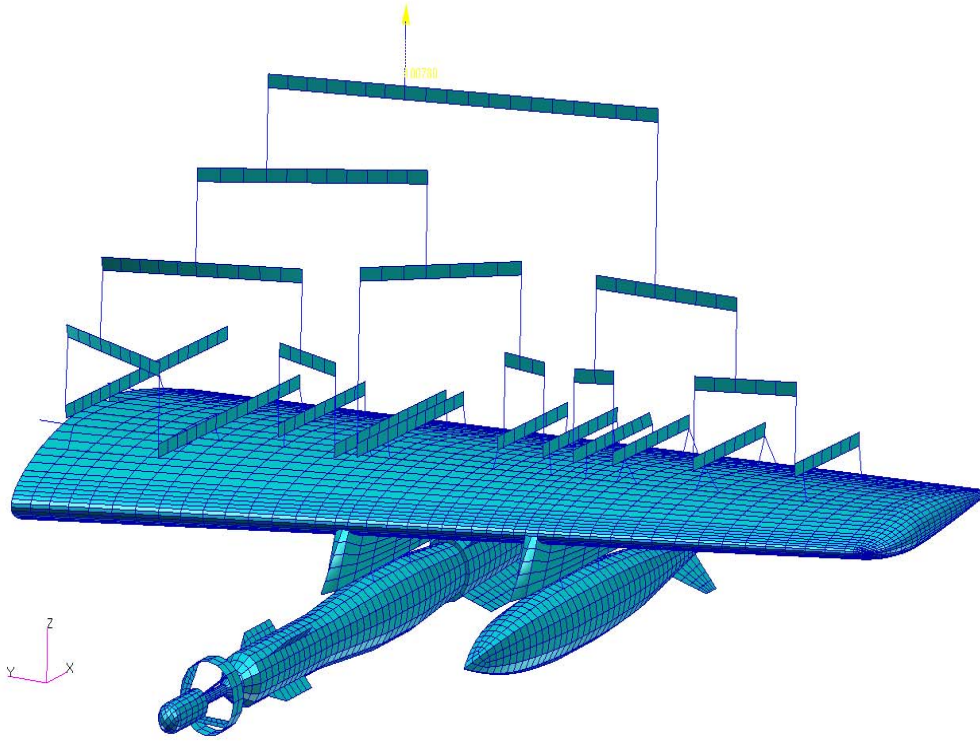


Fig. 3.5 FEM detail of the central fuselage-wing junction during the IAR-99 aircraft static test

Table 3.1 Forces applied to the wing fuselage junction during the static test

| **No. yoke** | **wing chord** | **Chord caisson LP** | **XLA 0.293C** | **XLP** | **XBA** | **Force per yoke [Kgf]** |
|---|---|---|---|---|---|---|
| 1 | 2276 | 1570 | 667 | 1263 | 307 | 1469 |
| 3 | 2102 | 1450 | 616 | 1409 | (41) | 920 |
| 4 | 2026 | 1398 | 594 | 865 | 533 | 1270 |
| 5 | 1944 | 1341 | 570 | 1108 | 233 | 903 |
| 6 | 1894 | 1307 | 555 | 1059 | 248 | 1040 |
| 7 | 1791 | 1236 | 525 | (638) | 598 | 501 |
| 8 | 1735 | 1197 | 508 | 738 | 459 | 403 |
| 9 | 1675 | 1156 | 491 | 794 | 362 | 803 |
| 10 | 1627 | 1123 | 477 | 762 | 361 | 1256 |
| 11 | 1533 | 1058 | 449 | 715 | 343 | 855 |
| 12 | 1425 | 983 | 418 | 641 | 342 | 618 |
| 13 | 1310 | 904 | 384 | -63 | 967 | 40 |

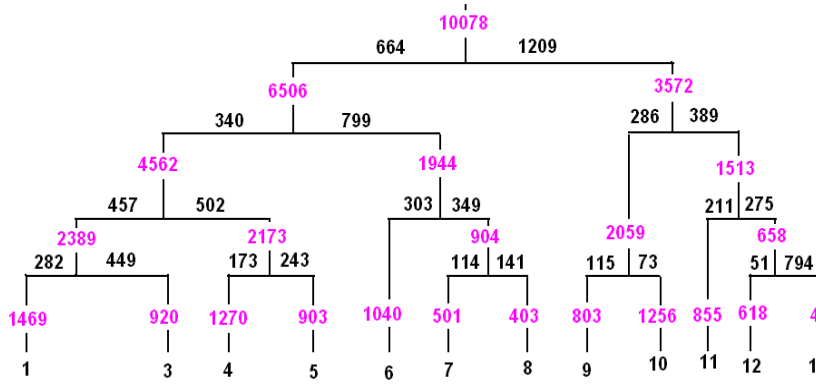


Fig. 3.6 Forces applied to the wing fuselage junction during the static test

## 4. FLIGHT TEST RESULTS

After flight testing and interpretation of results the following diagrams were obtained:

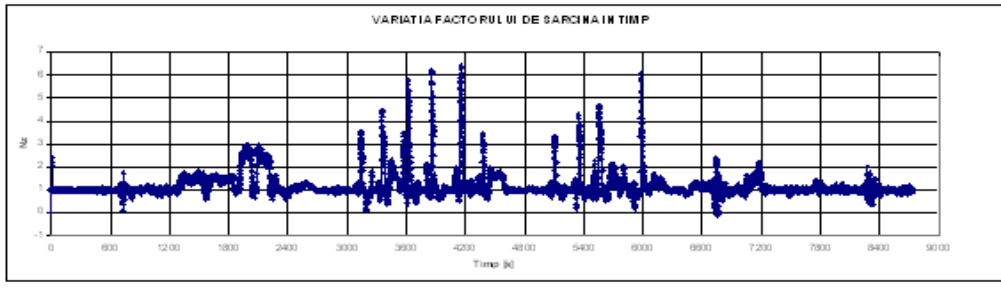


Fig. 4.1 Variation of the load factors during flight

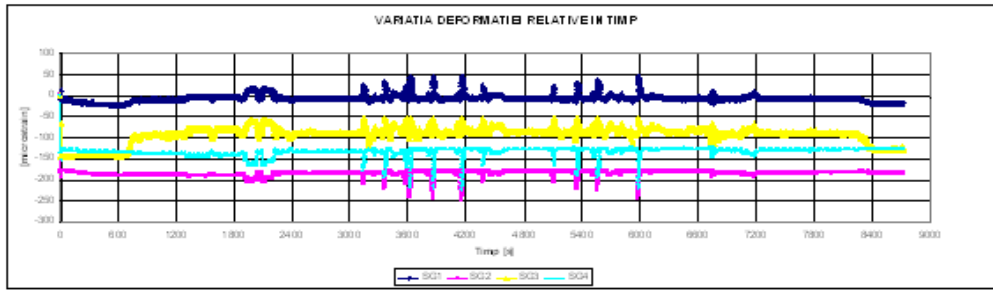


Fig. 4.2 Variation of the micro - deformations during flight

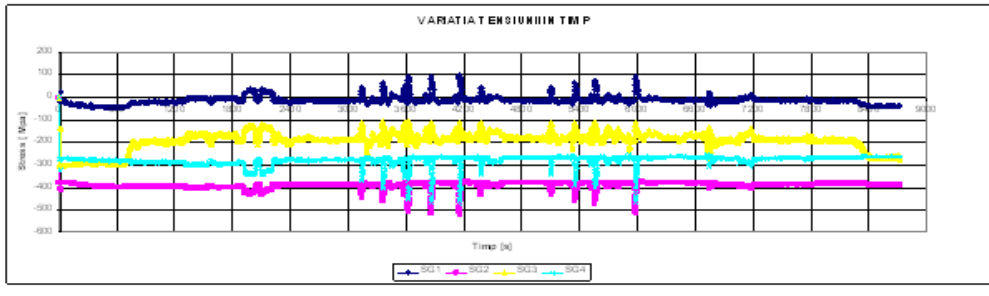


Figure 4.3 Variation of tensions [Mpa] with time

## 5. THE FUSELSGE LOWER FITTING - FEM

To determine the state of tension on lower fitting of the wing-fuselage junction, located on the fuselage, a finite element model (PATRAN / NASTRAN), was created which is shown in Fig. 5.1 and 5.2.

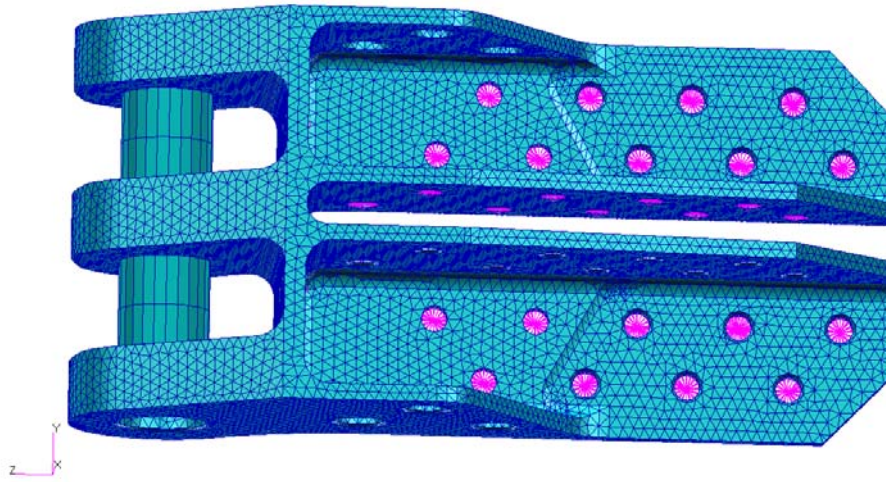


Fig. 5.1 Idealized model of the fuselage lower fitting

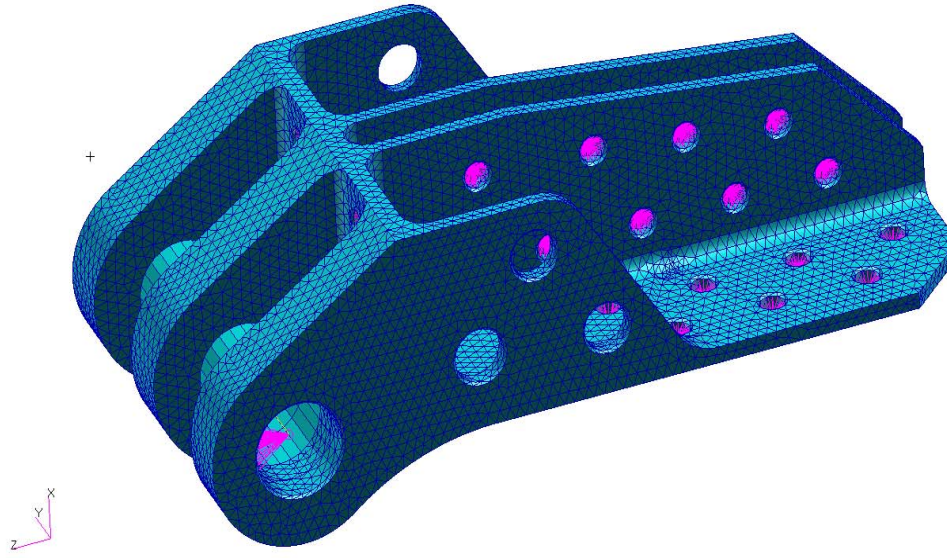


Fig. 5.2 Idealized model of the fuselage lower fitting

Fig. 5.3 shows the distribution of strain gauges on fittings and their coding.
FF 1 = Fuselage fitting 1 (extreme eye) FF 2 = Fuselage fitting 2 (central eye)
FA 1 = Wing fitting 1 FA 2 = Wing fitting 2

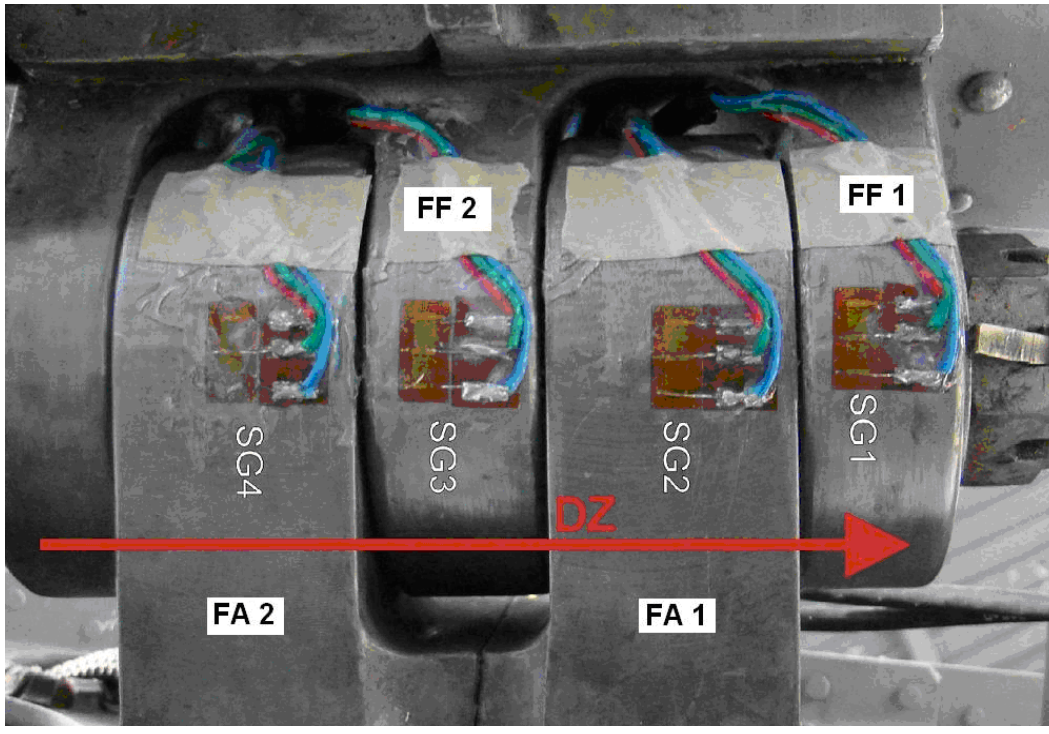


Fig. 5.3 Instrumented Wing – fuselage lower junction

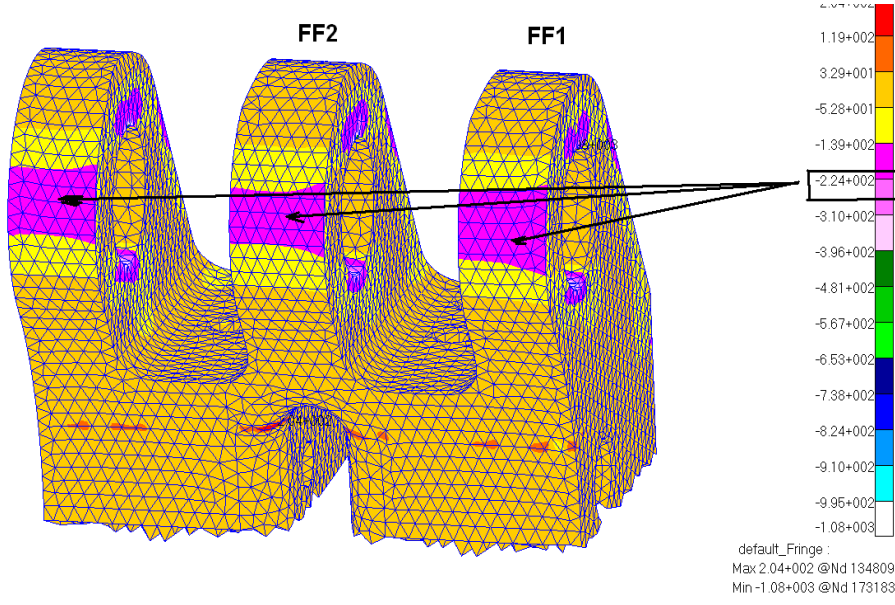


Fig. 5.4 Fuselage lower fitting – Main tensions [Mpa]

## 6. CONCLUSIONS

The information collected in flights 1 and 2 can be used to monitor the lifetime of the IAR-99 aircraft. Based on the registered load factors, load spectra can be built by types of missions (flight profiles) that can be compared to those utilized for the approval of aircraft (MIL spectra). Increasing the number of micro deformations acquisition points is necessary to determine the local and cumulative damage so as to cover the main junctions (wing-fuselage, empennages-fuselage, engine support-fuselage, main landing gear-wing and nose landing gear-fuselage). Experimental data analysis process is being developed for the use of all provided information.

In flight loads spectra will be defined by several methods such as: 'rain flow', 'passage by maxima' and/or 'passage by interval', requiring specific software, under development. To obtain comprehensive information on the IAR 99 life an assembly finite element model with weapons variants was developed. This requires a calibration similar to that shown for the wing-fuselage junction case.

## 7. REFERENCES

[1] *** *Av. P – 970, Design requirements for aircraft for the ROYAL AIR FORCE and ROYAL NAVY.*

[2] *** C-1095, DT70/10.06.1997, *Analysis of static and dynamic tests performed in the program of approval for the IAR-99 aircraft.*

[3] Simion Tataru, Dorin Lozici, Daniela Baran, Marcel Stere, Predictive Assessment of an Aircraft Structure Behaviour for Passenger and Crew Security, *INCAS BULLETIN*, Volume **1,** Number 2/2009, pp. 129-135, (online) ISSN 2247–4528, (print) ISSN 2066-8201, ISSN–L 2066-8201.

[4] *** *MIL-HDBK-5J, Metallic Materials and Elements for Aerospace -Vehicle Structures*, 31 January 2003.

[5] Paul ROSU, *Contributions to the modeling of the aerodynamic interaction on the aircraft elastic structures*, PhD thesis, Military Technical Academy.