Study on aerodynamic resistance to electric rail vehicles generated by the power supply

Ioan SEBESAN[1], Sorin ARSENE*[,1]

*Corresponding author
*[,1]"POLITEHNICA" University of Bucharest, Transport Faculty,
Depart Rolling Stock Railway
Splaiul Independentei no. 313, Sector 6, Code 060042, Bucharest, Romania
ioan_sebesan@yahoo.com, sorinarsene@gmail.com*

DOI: 10.13111/2066-8201.2014.6.S1.17

Abstract: *Improving the traction performance of the electric railway vehicles requires an analysis to reduce their aerodynamic resistance. These vehicles cannot be set in motion without an external power source, which demonstrates that the supply system is a key-element to their operation. The power source is located on the rooftop which basically results in an increase of their aerodynamic resistance. The present study discusses the aerodynamic resistance of the electric railway equipment such as pantographs, automatic circuit breaker, insulators, etc. The analyze is based on the equipment installed on the electric locomotive LE 060 EA of 5100 kW which is operational in Romania, emphasizing the pantographs role in capturing of electricity.*

Key Words: *aerodynamic resistance, electric rail vehicles, electric locomotive, drag coefficient, electric railway, pantograph*

1. INTRODUCTION

The general formula of drag for the railway vehicles, known as Davis relation [1], [2], [3], [4], [5], [6], [7], [8], [9], [10], [11] is given by:

$$R_t = a + b \cdot v + c \cdot v^2 , \tag{1}$$

where

R_t – total drag of the train;
a – mechanical rolling resistances caused by the axle loads;
$b \cdot v$ – Nonaerodynamic drag;
$c \cdot v^2$ –Aerodynamic drag ;
v – speed of the vehicle;

In the literature of specialty [12], [13], [14], [15], [16], [17], [18], the explanation of the "*c*" parameter is given by:

$$c = \frac{C_x \cdot S \cdot \rho}{2} , \tag{2}$$

where

$C_x = \dfrac{2 \cdot F_x}{S \cdot \rho \cdot v^{-2}}$ – aerodynamic coefficient of air sliding (also known as the coefficient of air penetration) (dimensionless);

S – front surface of the vehicle in cross section (m^2);

ρ – density of the moving vehicle air (kg/m^3);

F_x – the frontal sliding force (N);

$\bar{v}$ – velocity of the fluid (air) (m/s).

In the article „Aerodynamics of high-speed railway train" [1] the authors state that in a series of tests made in a "test tunnel" on TGV trains at a speed of 260 km/h they found that "Of the total aerodynamic drag, about 80% is given only by the body train aerodynamics, 17% of aerodynamics is due to the pantograph system and other devices on the train and the remaining 3% is caused by the braking mechanisms, etc."

In the same article, another study on ICE trains showed that "depending on the cross section shape of the motor vehicle, on its roof equipment, and on that located between the chassis and the running plane and also depending on the existence of hulls or skirts that conceal the external equipment (fig. 1 and fig. 2) the friction can be reduced and consequently the air drag coefficient can be lowered."

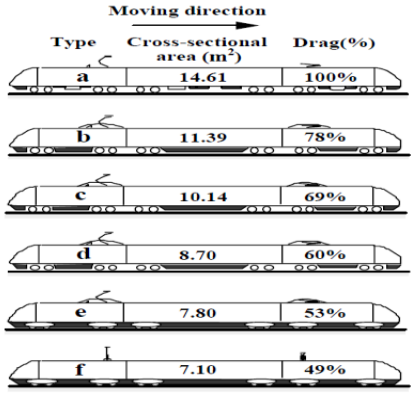

Fig. 1 "Aerodynamic drag on ICE (the hatching area is the device to smooth the structures underneath train" [16]

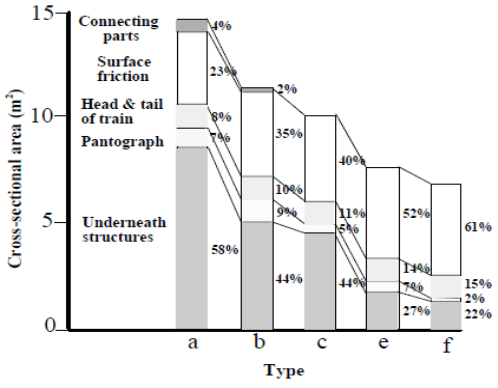

Fig. 2 "Aerodynamic drag components of ICE" [16]

2. AERODYNAMIC DRAG GIVEN BY ROOFTOP EQUIPMENT

Whereas the rail vehicles can move both ways in the case of the locomotive EA 5100 LE 060 kW, the rooftop equipment arrangement determines two distinct situations as can be seen in Fig. 3.

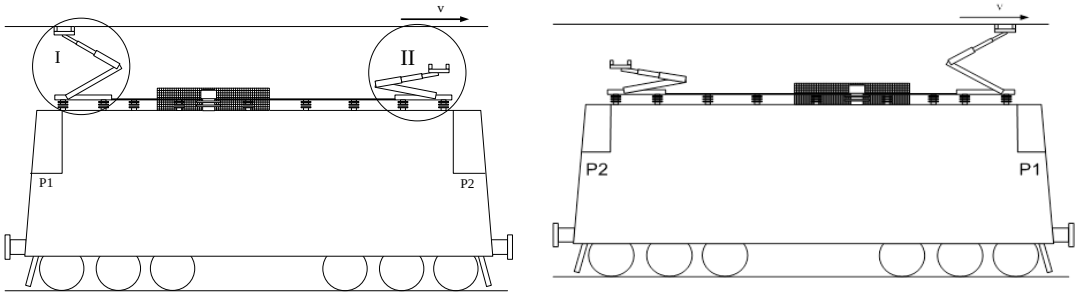

A. The locomotive is moving with the driving position 2 in the running direction

B. The locomotive is moving with the driving position 1 in the running direction

Fig. 3 Arrangement of equipment on the roof

The situations related to the energy capture which may occur in service are described in Fig. 4. A method to determine the pantograph aerodynamic resistance is shown in the article „Influence of the aerodynamic forces on the pantograph–catenary system for high-speed trains" [19]

„The evaluation of the aerodynamic forces acting on the elements of the pantograph requires the calculation of the aerodynamic coefficients of the different pantograph components, retaining only the stress effects:

$$F_{di} = \frac{\rho \cdot (C_d \cdot A)_i \cdot v_{p,rel}^2}{2} \tag{3}$$

$$F_{Li} = \frac{\rho \cdot (C_L \cdot A)_i \cdot v_{p,rel}^2}{2} \tag{4}$$

$$C_{di} = \frac{\rho \cdot (C_M \cdot Ah)_i \cdot v_{p,rel}^2}{2} \tag{5}$$

with $v_{p,rel}$ – representing the relative flow speed incident on the pantograph, $(C_d \cdot A)_i$, $(C_L \cdot A)_i$ and $(C_M \cdot Ah)_i$ being the pressure coefficients, for drag, lift and couple, respectively for each element into which the pantograph has been divided."[19]

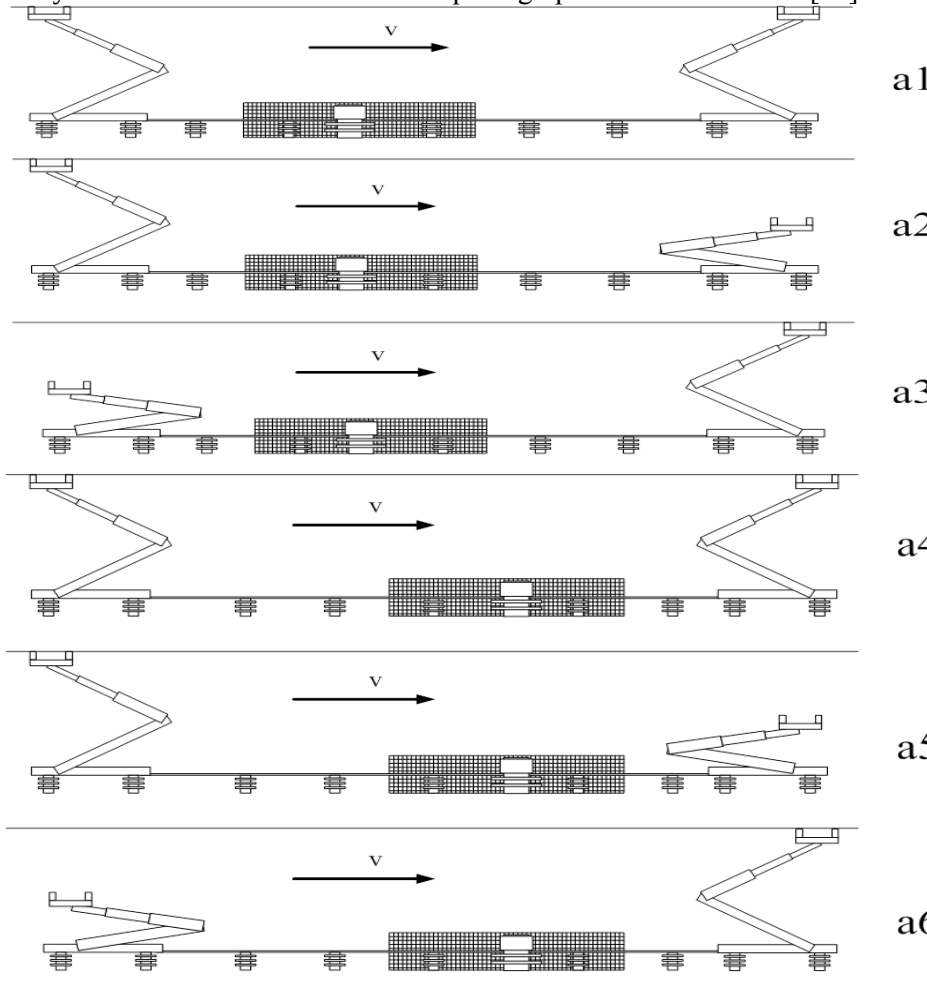

Fig. 4 Rooftop equipment arrangement

3. METHODS

The Analysis of air flow, among the elements of the equipment located on the roof of the locomotive, was performed starting from the constructive form of the pantograph EP3, of the IAC- type circuit-breaker and of the high voltage insulators, respectively, which were redrawn at the 1:1 scale using the Autodesk Inventor model and arranged according to the 6 cases presented in Fig. 4, after which they were placed/inserted in a flow simulation program. For the air flow simulation we used the SolidWorks Flow Simulation.

The delimitation of the air flow volume is achieved as follows: We considered the height of the ceiling plane of the vehicle, and another plan that is 6 m from it. For cross-section, we have considered two planes situated at 5 m symmetrically to the longitudinal plane of the vehicle, on both sides thereof. For longitudinal section, we have considered two planes located at 10 m and 20 m from the transverse plane of the vehicle. The first plane (situated at10m) corresponds to the front of the locomotive, in the running direction of the vehicle and the second (situated at 20m) corresponds to the rear of the vehicle.

As input parameters, we consider the case when the locomotives should move at a constant speed of 140 km / h, under normal atmospheric conditions, which means that the corresponding data for air are presented in Table 1.

Table 1. Input data

Pressure $[Pa]$	Temperature $[°K]$	Longitudinal velocity $[m/s]$
101325	293.2	40

Airflow simulations, along the equipment located on the roof of the locomotive, allowed us to determine the exerted pressures such as dynamic pressure, total pressure, aerodynamic drag and other parameters such as temperature, specific heat and turbulence. Fig. 5, Fig. 6 and Fig. 7 present the pressures exerted on the rooftop equipment, the contour lines for the dynamic pressure of the air, and the level changes of total pressure surface in the 6 analyzed cases.

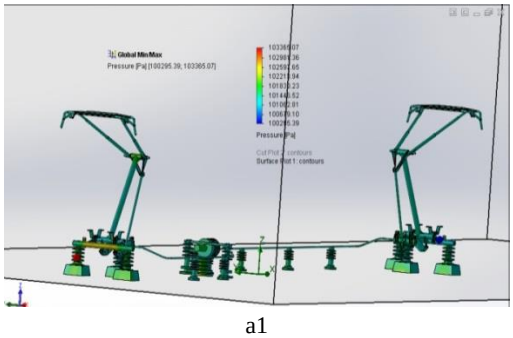

a1

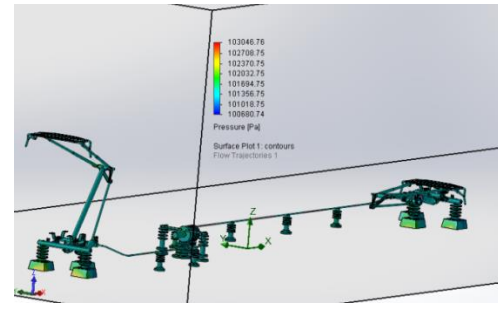

a2

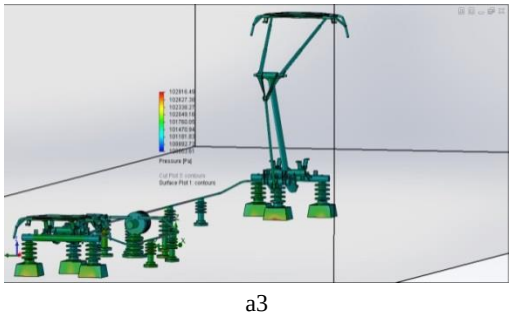

a3

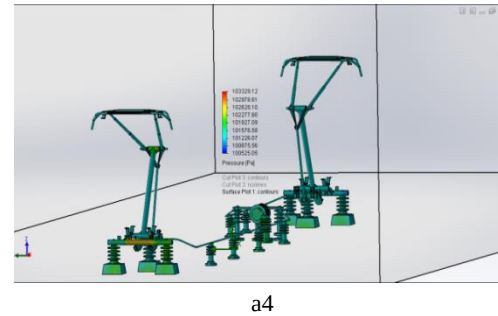

a4

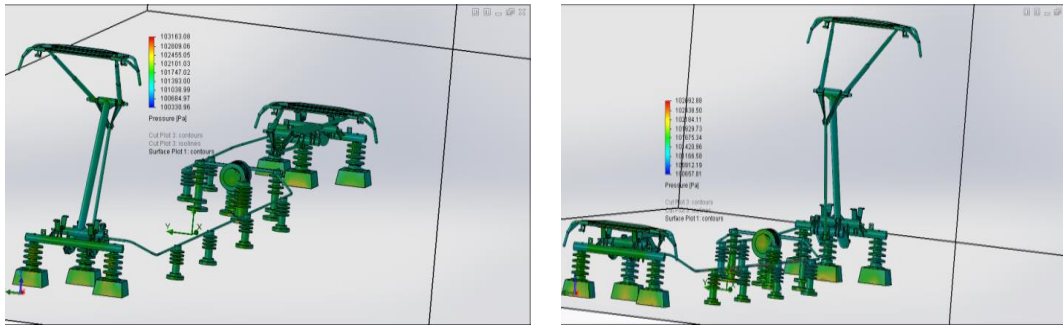

a5 a6

Fig. 5 The pressure exerted on the equipment located on the roof of the locomotive

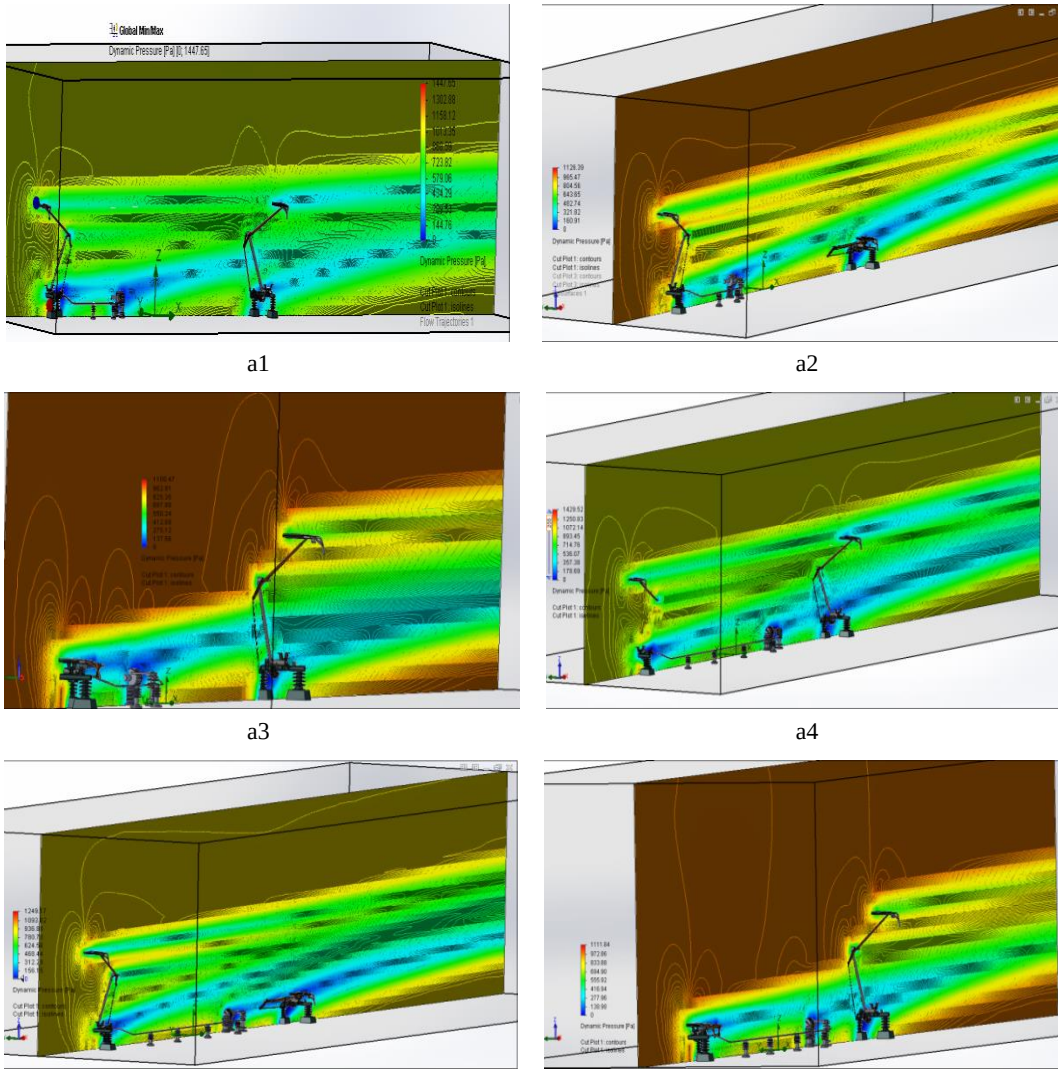

a1 a2

a3 a4

a5 a6

Fig. 6 Contour lines of the dynamic pressure in the vertical plane along the longitudinal axis

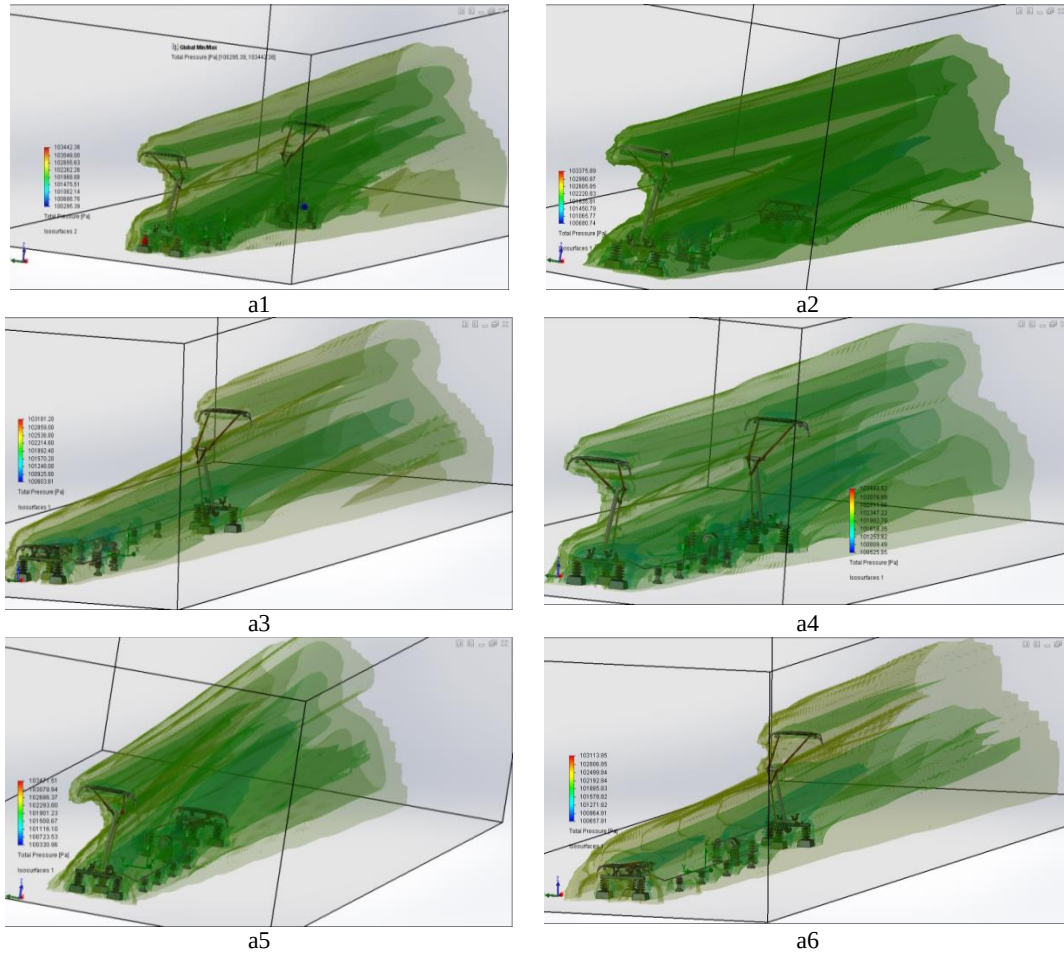

Fig. 7 Changes in surface level of the total pressure of the air surrounding the equipment

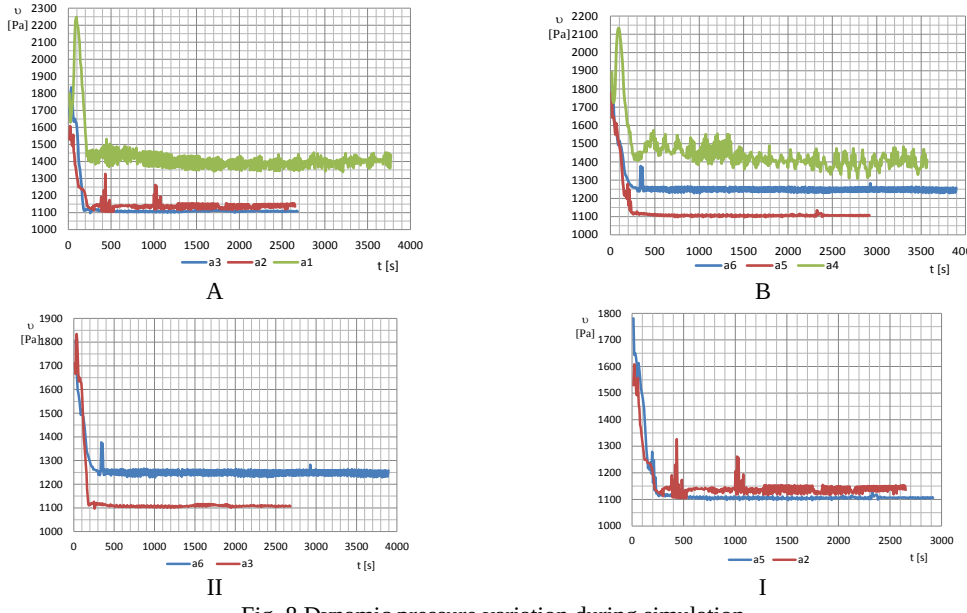

Fig. 8 Dynamic pressure variation during simulation

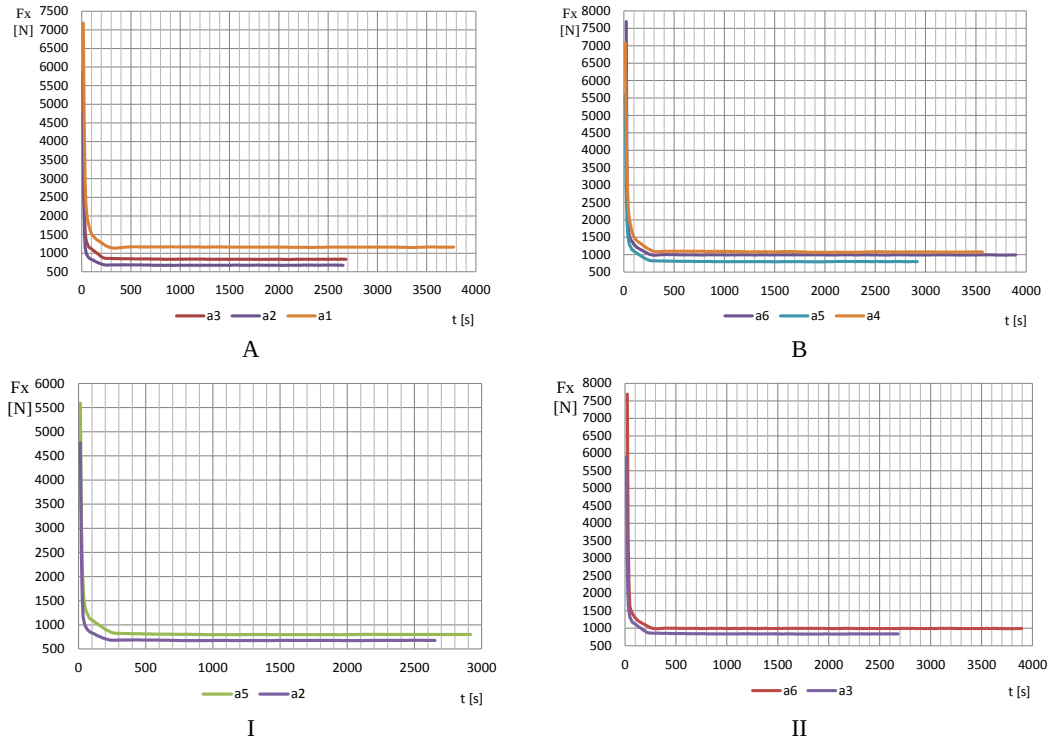

Fig. 9 Variation of the aerodynamic drag during simulation

4. CONCLUSIONS

After performing the simulations and analysis of the results on the determination of aerodynamic drag determined by the equipment located on the roof of the locomotive EA 5100 LE 060 kW the following can be noticed:

- the use of the driving post one in the running direction of the vehicle causes a lower drag resistance which can be explained by the fact that the automatic switch is located immediately behind the active pantograph (which captures electricity);
- the use of the first pantograph for electricity capture causes a lower aerodynamic drag of the devices placed on the box as in case of the second pantograph;
- regarding the use of active pantograph on this type of vehicle in the railway companies in Romania, the minimum drag is obtained analyzed variant.

ACKNOWLEDGEMENT

The analysis presented in this paper was carried out in the PhD thesis “Contributions to improve the performance of traction of the electric vehicles” by assistant PhD student Sorin Arsene under the coordination of the scientific coordinator Prof. Dr. Eng. IOAN SEBEȘAN and will be part of this work.

REFERENCES

[1] R. S. Raghunathan, H.-D. Kim, T. Setoguch, Aerodynamics of high-speed railway train, *Progress in Aerospace Sciences*, vol. **38**, Issues 6–7, ISSN: 0376-0421, pp. 469–514, 2002.

[2] G. Chiriac, Teză de Doctorat - *Contribuții la utilizarea rațională a energiei de mișcare a vehiculelor*, UNIVERSITATEA TEHNICA „GH. ASACHI" IASI, IASI, 2002.

[3] P. Lukaszewicz, Doctoral Thesis - *Energy Consumption and Running Time for Trains - Modelling of running resistance and driver behaviour based on full scale testing*, Department of Vehicle Engineering Royal Institute of Technology, KTH, Stockholm, 2001.

[4] A. Orellano, M. Schober, *Aerodynamic Performance of a Typical High-Speed Train*, în Proceedings of the 4th WSEAS International Conference on Fluid Mechanics and Aerodynamics, Elounda, Greece, August 21-23, pp. 18-25, 2006.

[5] I. Sebeşan, B. Țarus, The impact of aerodynamics on fuel consumption in railway applications, *INCAS BULLETIN*, Volume **4**, Issue 1, (online) ISSN 2247–4528, (print) ISSN 2066–8201, ISSN–L 2066–8201, DOI: 10.13111/2066-8201.2012.4.1.10, pp. 93 – 102, 2012.

[6] I. Sebeşan, S. Arsene, *Considerations on study the aerodynamic of pantographs railway vehicles*, in International Conference of Aerospace Sciences – "AEROSPATIAL 2012", Bucharest, 11-12 October, p.397-402, 2012

[7] S. Arsene, *Analysis regarding the aerodynamic resistances on boxes electric locomotives*, in The International Conference on INnovation and Collaboration in Engineering Research – " INCER 2013", Bucharest,, 20-21 June, pp. 157-160, 2013.

[8] I. Sebesan, S, Arsene, C. Stoica, Experimental analysis for aerodynamic drag of the electric locomotives, *INCAS BULLETIN*, vol. **5**, Issue 3, (online) ISSN 2247–4528, (print) ISSN 2066–8201, ISSN–L 2066–8201, DOI: 10.13111/2066-8201.2012.5.3.11, pp.99-115, 2013.

[9] P. Lukaszewicz, E. Andersson, *Green Train energy consumption Estimations on high-speed rail operations*, KTH Railway Group, Stockholm, ISBN 978-91-7415-257-9, Stockholm 2009.

[10] J. Winter, J. König, G. Kopp, H. Dittus, Next Generation Train. The revolution. Railvolution, *ART&Press s.r.o.*, nr. 04/12, pp. Seiten 28-37, 2012.

[11] L. Li, W. Dong, Y, Ji, Z, Zhang, A minimal-energy driving strategy for high-speed electric train, *J Control Theory*, vol. **10**, nr. 3, ISSN: 1672-6340 (Print) 1993-0623 (Online), DOI 10.1007/s11768-012-1129-0, pp. 280–286, Appl 2012.

[12] B, D. Țarus, *Teză de Doctorat - Influența rezistențelor de rulare și aerodinamice asupra consumului energetic la vehiculele motoare*, Universitatea Politehnica din București, București, 2011.

[13] F, Cheli, R, Corradi, D, Rocchi, G, Tomasini, E, Maestrini, Wind tunnel tests on train scale models to investigate the effect of infrastructure scenario, *Journal of Wind Engineering and Industrial Aerodynamics*, vol. **98**, nr. 6-7, ISSN: 0167-6105, doi:10.1016/j.jweia.2010.01.001, pp. 189–201, 2010.

[14] F. Cheli, F. Ripamonti, D. Rocchi, G. Tomasini, Aerodynamic behaviour investigation of the new EMUV250 train to cross wind, *Journal of Wind Engineering and Industrial Aerodynamics*, Volume **98**, Issues 4–5, ISSN: 0167-6105, pp. Pages 189–201, April–May 2010.

[15] M, Schober, M, Weise, A, Orellano, P, Deeg, W. Wetzel, Wind tunnel investigation of an ICE3 endcar on three standard ground scenarios, *Journal of Wind Engineering and Industrial Aerodynamics*, vol. Volume **98**, nr. Issues 6–7, ISSN: 0167-6105, DOI:10.1016/j.jweia.2009.12.004, Pages 345–352, June–July 2010.

[16] F. Cheli, F. Ripamonti, D. Rocchi, G. Tomasini, *Train shape optimisation to improve cross-wind behaviour*, în EUROMECH COLLOQUIUM 509, Vehicle Aerodynamics, External Aerodynamics of Railway Vehicles, Trucks, Buses and Cars, Berlin, Germany, March 24--25, pp.27-39, 2009.

[17] I. Sebeşan, B. Tarus, Some aspects regarding the impact of aerodynamics on fuel consumption in railway applications, *U.P.B. Sci. Bull., Series D*, Vol. **73**, Iss. 4, p. 237-246, 2011.

[18] I. Sebeşan, B. Tarus, Experimental determinations of the aerodynamic drag for vehicles subjected to the ground effect, *INCAS BULLETIN*, Volume **4**, Issue 2, Issue 3, (online) ISSN 2247–4528, (print) ISSN 2066–8201, ISSN–L 2066–8201, DOI: 10.13111/2066-8201.2012.4.2.11, pp. 99 – 110, 2012.

[19] J. Pombo, J. Ambrósio, M. Pereira, F. Rauter, A. Collina, A. Facchinetti, Influence of the aerodynamic forces on the pantograph–catenary system for high-speed trains, *Vehicle System Dynamics*, Vol. 1 din Vol. **47**, No. 11, ISSN 0042-3114 (Print), 1744-5159 (Online), DOI:10.1080/00423110802613402, pp. 1327–1347, November 2009.