A VORTEX MODEL OF A HELICOPTER ROTOR

Valentin BUTOESCU

Department of Aerodynamics
"Elie Carafoli" National Institute for Aerospace Research – INCAS
061126, Bucharest, Romania, e-mail: vbutoesc@incas.ro

DOI: 10.13111/2066-8201.2009.1.1.5

Abstract

A vortex model of a helicopter rotor is presented. Each blade of the rotor has three degrees of freedom: flapping, lagging and feathering. The motions after each degree of freedom are also known for all blades. The blade is modelled as a thin vortex surface. The wakes are free fluid surfaces. A system of five equations are obtained: the first one is the integral equation of the lifting surface (rotor), the next three describe the wakes motion, and the last one relates the vortex strength on the wakes and the variation of vorticity on the rotor. A numerical solution of this system is presented. To avoid the singularities that can occur due to the complexity of vortex system, a desingularized model of the vortex core was adopted. A Mathcad worksheet containing the method has been written.

The original contribution of the work. *The calculation method of the motion of the wakes free vortex system, the development of the vortex cores in time and a new method to approximate the aerodynamic influence of remoted wake regions.*

1. Introduction

The wakes of the rotor blades play an important role for the helicopter aerodynamics. While the aircraft fixed wing generates a wake whose motion could be neglected when compared to the aircraft speed, the situation is totally different with helicopters. The wakes interact with the blades generating shocks, vibrations and noise [2].

The paper presents the first results obtained by the author in his attempt to study this vast domain of rotor aerodynamics by means of vortex methods.

The vortex model used in the present work used the desingularized swirl-velocity profiles [3].

The present paper should be considered as an introductory presentation of the results obtained by the author in the field.

2. Blade Geometry and Kinematics

The blade shape is always considered as trapezoidal, fig. 1. Initially, the geometry was defined in blade curvilinear coordinate system, *xsz*. As the blade was finally considered rigid, $s \equiv y$, i. e. one can use the Cartesian coordinates instead of curvilinear ones. The blade geometry is given by (x_0, s_0), s_p (blade length), c_0 (base chord), Λ_a, Λ_f (sweep angle at leading/trailing edges).

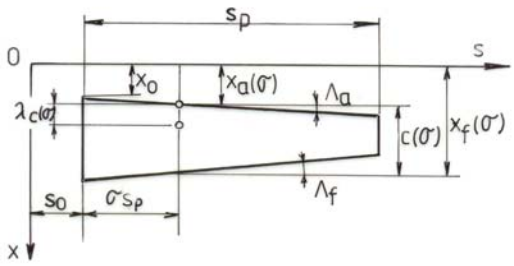

Fig. 1 Blade geometry

A point on the blade is usually referred to by the non dimensional parameters, $\lambda, \sigma \in [0,1]$, fig. 1.

Fig. 2 presents a rotor mechanism that consists of cyclic and collective controls and of two swashplates (fixed and mobile).

Fig. 2 A simple rotor mechanism (Robinson R22)

Figure 3 shows schematically the particular case of mechanism we have used in this paper. Of course, a different linkage of the mechanical parts is also possible. Anyway, one can write the coordinate transformation from the i_p's blade frame *o'xyz* to rotor frame: OXYZ,

$$[X\ Y\ Z]^T = \boldsymbol{T}(t,i_p) + \boldsymbol{R}(t,i_p)\ [x\ y\ z]^T \qquad (1)$$

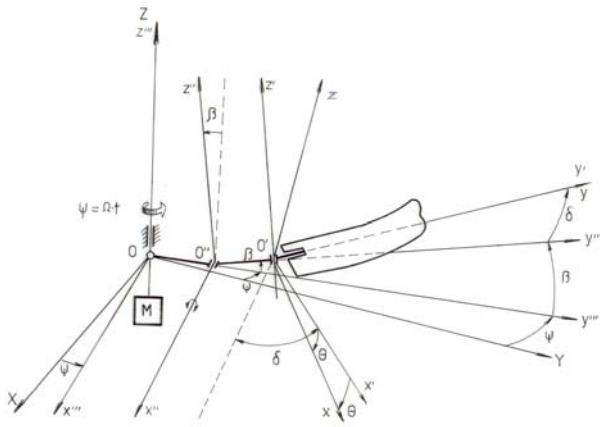

Fig. 3 Coordinate systems

In the above formula, $\boldsymbol{T}$ is the translation matrix from O to o', $\boldsymbol{R}$ is the rotation matrix, t is the time, and i_p represents the blade order number.
The azimuth angle of blade i_p is given by:

$$\Psi = \Omega \cdot t + \frac{2\pi}{N_p}\left(i_p - 1\right) \qquad (2)$$

Here Ω=const. represents the hub angular velocity and $i_p \in \{1,2...N_p\}$. We also define the pitch angle $\theta=\theta(t,i_p)$, the lag angle $\delta=\delta(t,i_p)$, and the flap angle $\beta=\beta(t,i_p)$, as fig. 3 shows. For example, we can consider as usually a Fourier representation of θ, β and δ:

$$\begin{cases} \Psi(t,i_p) = \Omega \cdot t + \dfrac{2\pi}{N_p}\left(i_p - 1\right) \\ \theta(t,i_p) = A_0 + A_1 \cos\Psi + B_1 \sin\Psi \\ \beta(t,i_p) = a_0 + a_1 \cos\Psi + b_1 \sin\Psi \\ \delta(t,i_p) = aa_0 + aa_1 \cos\Psi + bb_1 \sin\Psi \end{cases} \qquad (3)$$

available for each blade i_p with different coefficients, A_n,B_n. However, the method is not restricted to this kind of functions.
We also use the aerodynamic system $OX_aY_aZ_a$. The wind velocity vector is U_c and its direction is given by the angles α and β (fig. 4). The aerodynamic system not represented here is obtained from $OXYZ$ by (1) a rotation about OY with angle α and

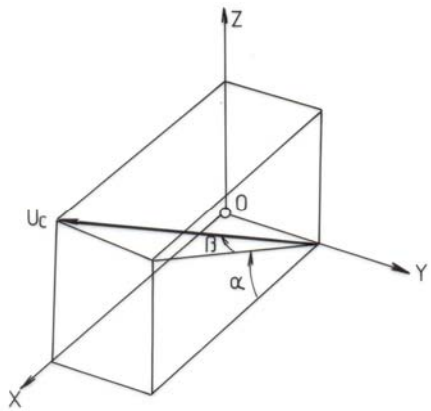

Fig.4 Wind speed U_c in rotor coordinate system $OXYZ$;

(2) a rotation about the new OZ with angle β, so that the new OX, i.e. OX_a lies along U_c. The coordinate transformation is given by

$$[X\ Y\ Z]^T = \boldsymbol{M_a}[X_a\ Y_a\ Z_a]^T \qquad (4)$$

Here, $\boldsymbol{M_a}$ is the rotation matrix depending on α and β.
Resuming, the rotor kinematics data are:

- shaft angular velocity Ω=const;
- linkage geometry (here $a=OO''$ and $b=O''O'$),
- pitch angle $\theta(t, i_p)$- flight control as collective and cyclic pitch;
- flap angle $\beta(t, i_p)$;-it results from the integration of blade equation of motion, but considered here as given;
- lag angle $\delta(t, i_p)$;- results from the integration of blade equation motion, considered now as given;

Consider the blade i_p and a point (x,y,z) on it. Differentiating (1) with respect to t, one gets

$$\mathbf{V} = \mathbf{V}_O + \dot{\mathbf{R}} \cdot [x\ y\ z]^T \qquad (5)$$

It represents the velocity of the point (x,y,z) attached to the blade with respect to $OXYZ$. Alternatively, the projection of $\mathbf{V}$ on $o'xyz$ frame could be written as in Mechanics:

$$\boldsymbol{v} = \boldsymbol{v}_o + \boldsymbol{\omega} \times \boldsymbol{r}, \quad \boldsymbol{r} = x\mathbf{i} + y\mathbf{j} + z\mathbf{k}, \qquad (6)$$

Here, $\boldsymbol{v}_0$ is the o' velocity in $o'xyz$ frame (or $\mathbf{V}_0$ in $OXYZ$), while $\boldsymbol{\omega}$ represents the angular velocity of the blade.

3 Aerodynamic Models of the Blades and Wakes

Each blade is aerodynamically represented by a vortex lattice (fig. 5). The vortex ring model of the lattice was used, since it brings some advantages in unsteady flow case. In the centre of each vortex ring there is a "normal-wash collocation point".

One can see that the last ring in a chord row has a side across the trailing edge.

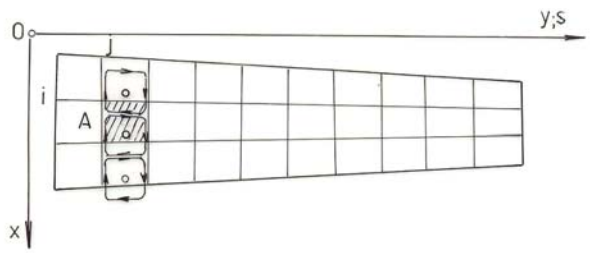

Fig. 5 Vortex ring model and normalwash collocation points

That is the place where the blade lattice-vortices are connected to the trailing edge wake.

The trailing edge wake is depicted in fig. 6. It is linked to the bound vortex system on the blade (fig. 5).

This is the situation at a certain moment, $t_k, k \in \{1,2...M\}$. After an "elementary time" Δt, all the trailing vortex carpet is drifted, and a new vortex ring row is generated at the trailing edge.

The new vortex row just woven connects the bound trailing edge vortices and the free vortex carpet.

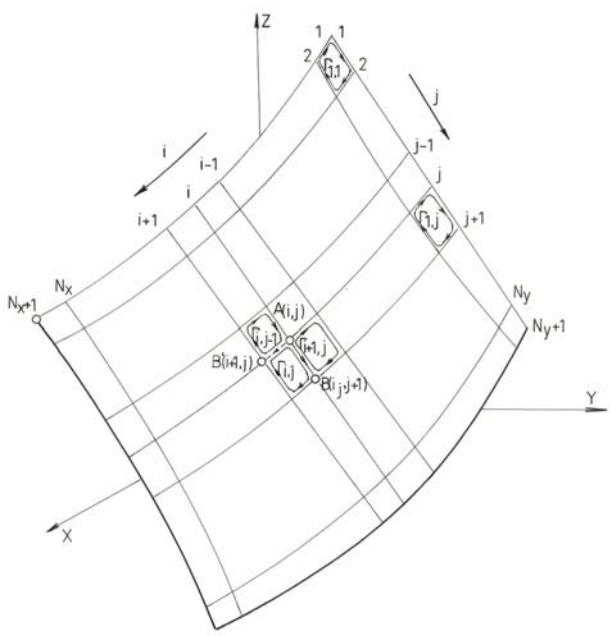

Fig. 6 Vortex ring model of a blade wake

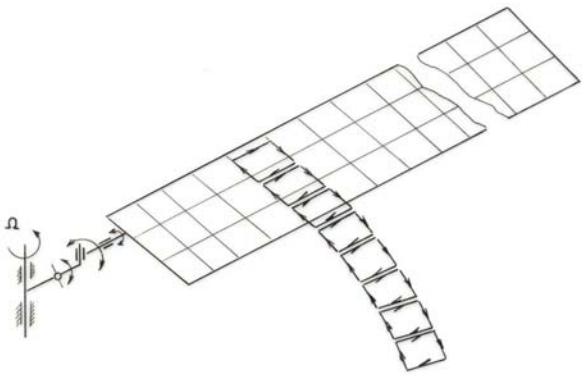

Fig. 7 Wake generation

4 Equations

The time is divided in time-steps, $t_k, k \in \{1,2...M\}$.

At each time-step t_k there are two distinct vortex systems: those attached to the blades (bound vortices) and those belonging to the trail vortices. The bound vortices have a specified motion, but the trail vortices have a free motion, that must be calculated. At time t_k we have the unknown vorticity $\gamma_n^{(k)}$ of the k vortex ring and the downwash $W_m^{(k)}$ at the collocation point m:

$$\begin{cases} \sum_{n=1}^{N_t} C_{mn}^{(k)} \gamma_n^{(k)} = W_m^{(k)} \\ W_m^{(k)} = -U_c(t_k)\boldsymbol{\delta}_c(t_k)\cdot \mathbf{n}_m^{(k)} + (\mathbf{V}_t)_m^{(k)} \mathbf{n}_m^{(k)} - \mathbf{v}_{Dm}^{(k)} \cdot \mathbf{n}_m^{(k)} \end{cases} \quad (7)$$

where

N_t= total number of boxes on rotor,

K = time step index,

M = normalwash index, m$\in\{1,2\ldots Nt\}$.

$C_{mn}^{(k)}$=(m, n) element of influence coefficients matrix (of n x m), at time $t=t_k$;

$\gamma_m^{(k)}$=vortex ring strength at $t=t_k$;

$W_m^{(k)}$=element m of the normalwash at $t=t_k$;

$U_c(t_k)\delta_c(t_k)$=wind speed (δ_c is the wind direction unit vector);

$(\mathbf{V}_t)_m^{(k)}$=normalwsh due to pitching, flapping and lagging at point m at $t=t_k$;

$\mathbf{v}_{Dm}^{(k)}$=wake induced velocity at point m la $t=t_k$;

$\mathbf{n}_m^{(k)}$=normal unit vector at collocation point m, and at time $t=t_k$;

The influence coefficients matrix has a special structure:

$$C^{(t)} = \begin{bmatrix} Block1,1 & \ldots & \ldots & \ldots \\ \ldots & Block2,2 & \ldots & \ldots \\ \ldots & \ldots & \ldots & \ldots \\ \ldots & \ldots & \ldots & BlockNp,Np \end{bmatrix}$$

$Block_{ip,ip}$ are square blocks of blade self induced normal velocities and they remain constant. So they are calculated once for all time steps, but the other components of the matrix should be calculated at any $t=t_k$.

The linear system (7) is solved at each time step. Then, the trailing vortices are drifted for the time Δt . At time step k+1 the trailing vortices get new rows of ring vortices so that the circulation remains unchanged.

5. Results

The method presented above was programmed in Mathcad. The blade is divided into unequal boxes, smaller at the tip and at the leading and trailing edges (fig. 8).

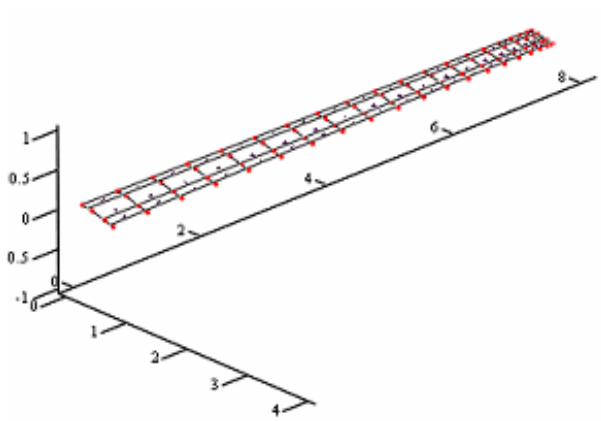

Fig. 8 Blade elements

In fig. 9 a rotor consisting of three blades is presented.

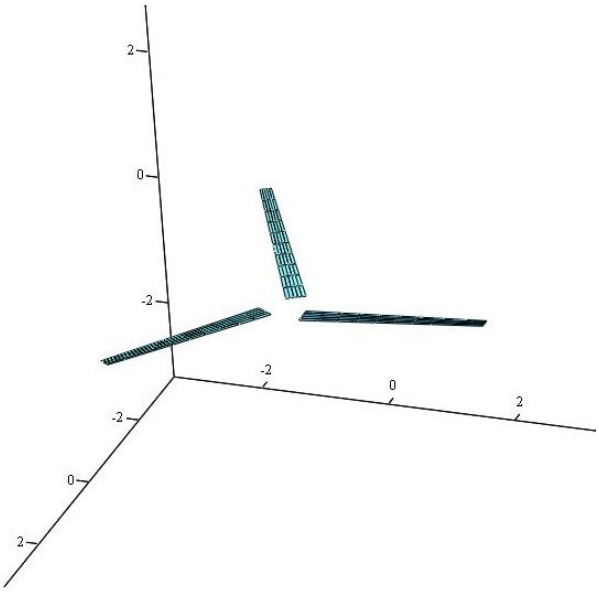

Fig. 9 Rotor elements

The first case: the rotor moves upward with a velocity of 5m/s while A_0=1 and A_n=0, B_n=0. The rotor rotational velocity is Ω=31 rad/s. The wake left behind by the blade number 1 is represented in fig. 10.

The load distribution on the blades is presented in fig. 11. The next figure shows the vertical component of the aerodynamic load on the rotor.

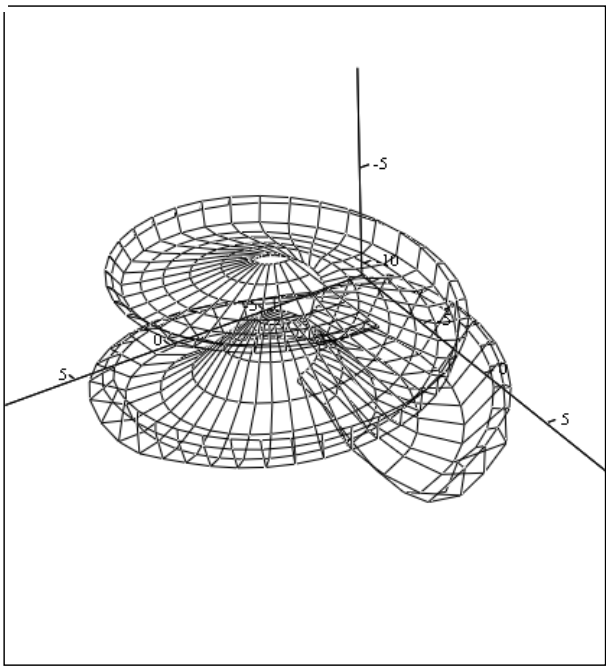

(XTp, YTp, ZTp)

(a)

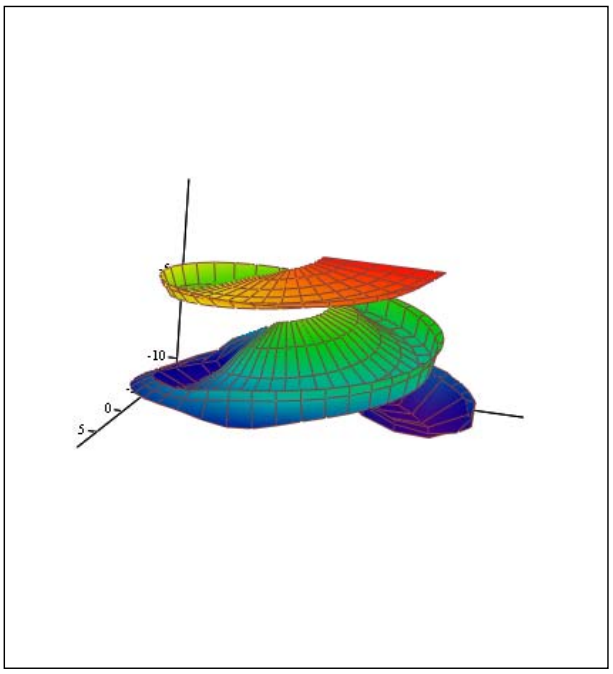

(XTp, YTp, ZTp)

(b)

Fig. 10 The wake of blade no. 1:
(a) the contours of the trailing vortex surface;
(b) the vortex surface (climbing flight):

The second case: the rotor moves forward slowly, with a velocity V=20m/s. The rotor plane angle with respect to the horizontal is α=-20^0. The Fourier coefficients are all 0, except for A_0=A_1=1. The wake of blade 1 is presented in fig. 13.

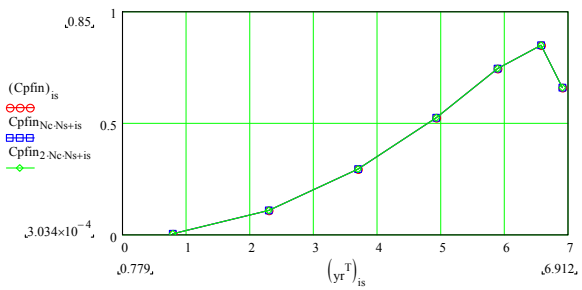

Fig. 11 Spanwise load distribution on a blade (climbing flight)

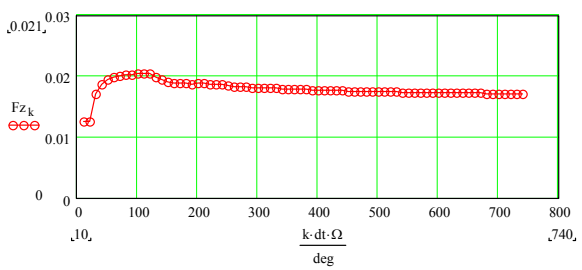

Fig. 12 Vertical rotor load vs. rotation angle (climbing flight)

The loads on the blades are given in fig. 14 at the end of the first two rotations.

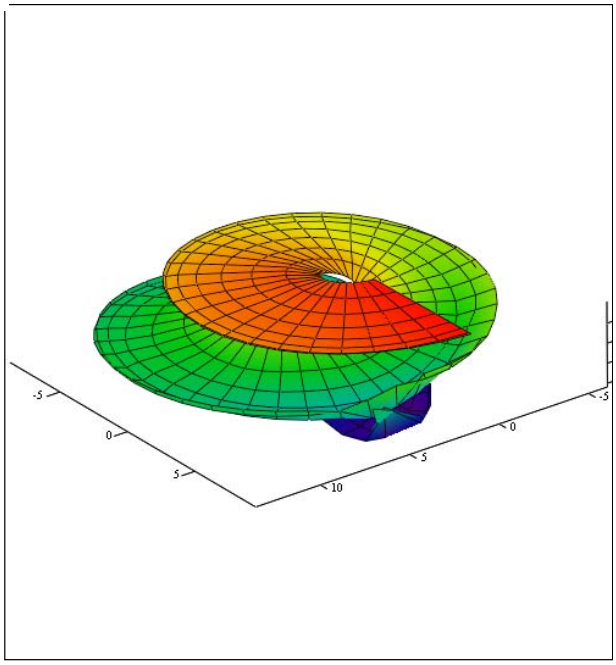

(XTp, YTp, ZTp)

Fig 13 Wake of blade no. 1, forward flight

Fig. 15 represents the vertical component of the rotor force coefficient as a function of rotation angle (i.e. time).

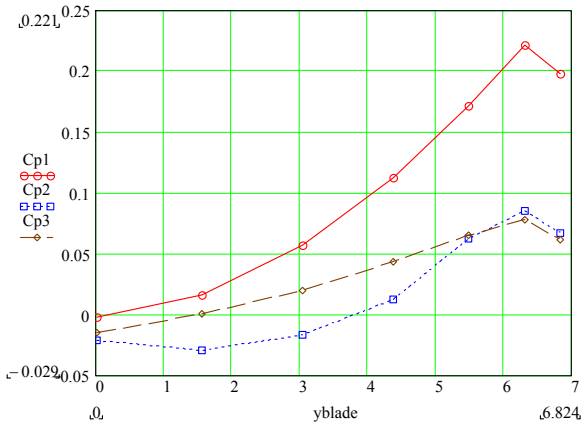

Fig. 14 Spanwise load distribution on a blade (forward flight)

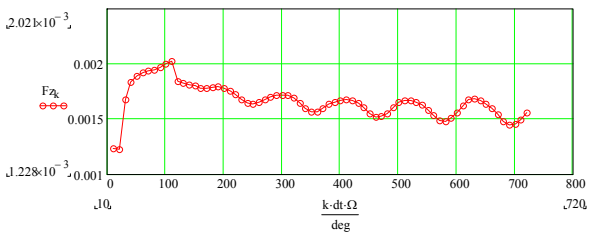

Fig. 15 Vertical rotor load vs. rotation angle (forward flight)

Conclusions

A vortex method approach to the aerodynamics of the helicopter rotor was presented. The paper describes the general results, but the details on wake modeling, induced velocity field calculation and far-wake influence calculation will be presented in a further paper.

REFERENCES

[1] *STEPNNIEWSKI, W.Z. , KEYS, C. N.* ***"Rotary-Wing Aerodynamics"***, Dover Publications, Inc., New York

[2] *BHAGWAT, M. J, LEISHMAN J. G.* ***"Time-Accurate Free-Vortex Wake Model for Dynamic Rotor Response"***, Presented at the Aeromechanics 2000, American Helicopter Society Specialist Meeting, Atlanta, GA, Nov. 13-14, 2000.

[3] *BHAGWAT, M. J, LEISHMAN J. G.* ***–"Generalized Viscous Vortex Model for Application to Free-Vortex Wake and Aeroacoustic Calculations"***, The 58th Annual Forum and Technology Display of the American Helicopter Society International, Montreal,Canada,June 11-13, 2002, published by the AHS International Society.

[4] *ANANTHAN, Sh., LEISHMAN J. G., RAMASAMY, M.* ***"The Role of the Filament Stretching in the Free-Vortex Modeling of Rotor Wakes"***, The 58th Annual Forum and Technology Display of the American Helicopter Society International, Montreal,Canada,June 11-13, 2002, published by the AHS International Society.