Mechanical behavior of sandwich structure composites for helicopters

George PELIN*[,1], Cristina-Elisabeta PELIN[1], Adriana STEFAN[1], Alexandra PETRE[1], Alina DRAGOMIRESCU[1]

*Corresponding author
INCAS – National Institute for Aerospace Research "Elie Carafoli",
B-dul Iuliu Maniu 220, Bucharest 061126, Romania,
pelin.george@incas.ro*, pelin.cristina@inccas.ro, stefan.adriana@incas.ro,
petre.alexandra@incas.ro, dragomirescu.alina@incas.ro

DOI: 10.13111/2066-8201.2020.12.4.14

Received: 18 September 2020/ Accepted: 22 October 2020/ Published: December 2020

Abstract: *The visible part of the floors of a commercial aircraft has long been a standard issue for virtually every commercial aircraft, mainly due to the weight of the materials from which they were made. Floor parts must provide mechanical strength and dimensional stability, while keeping the weight of the aircraft as low as possible for maximum efficiency. The design of the 787 Dreamliner and the Airbus A380 aircraft brought new opportunities in the use of the sandwich composite structure, mainly due to their light weight and high strength-to-weight ratio. Thus, this paper investigates the mechanical behavior of sandwich composite panels composed of two sides of carbon fiber laminate and Nomex honeycomb core obtained in the autoclave and developed under the RoRCraft CompAct grant. The technical approaches of this work are mainly focused on the compression behavior and especially on the compression after impact behavior of the hybrid sandwich composite structure, for defining and obtaining an optimal structure for the floors. These mechanical tests are decisive for such materials and have been performed in accordance with international ASTM standards.*

Key Words: *sandwich structure composite, compression, impact, compression after impact*

1. INTRODUCTION

With the development of new technologies for obtaining composite materials, honeycomb sandwich composites are increasingly used in the fields of aerospace, civil engineering and other fields due to their good performance in light, high strength and rigidity, along with fatigue resistance [1]. The sandwich composite panel is a structural panel concept that consists of a lower and an upper top layer, respectively, and a core, in its simplest form of two parallel relatively thin sheets of carbon fiber laminate, glued and separated by a relatively thick and light core of honeycomb.

The core serves to separate the upper layers from each other, as a spacer between the upper layers; and the main role of the core is to support the faces against buckling and to withstand shear loads outside the plane. The core must have a high shear strength and compression stiffness. As a result, the sandwich panel can efficiently absorb tensile and compressive forces in the top layers. The tensile and compressive forces in the top layers stem primarily from bending stress, meaning from a load that acts perpendicularly on one of the top

layers of the sandwich panel. Helicopter floorboards are lightweight, highly stiffened panels, often made of composite sheet and aluminum honeycomb sandwich material [2].

The production of sandwich composite panels is generally manufactured using an autoclave, by impregnation and pressing with a vacuum bag [3].

Sandwich composite structures are widely used, especially the visible part of the surfaces of aircraft fuselages, such as the rudder, aileron, spoiler and damper. The front sheet of honeycomb sandwiches is usually thin laminated composite, and the inside of the sandwich is mostly honeycomb cell walls made of Nomex, fiberglass or aluminum [4].

Each of the materials that make up the composite sandwich structure, Nomex honeycombs and CFRP plates have global elastic properties in two orthogonal directions parallel to and transverse to the longitudinal axis of the deck. Due to their light weight, efficient geometry and the inherent rigidity in bending and torsion, this type of bridge has the advantage of being relatively easy to build [5].

Dismantling, sandwich flattening and other internal damage between honeycomb sandwich panels and sandwich structures should be avoided during the manufacturing process, because they decrease the mechanical properties in the strength of the material (or rigidity) and will affect the safety of the structure [1].

Novel composite sandwich structures with energy-absorbing cores protect load-bearing composite structures from impact damage [6].

It has been found that accidental impacts can transfer small amounts of kinetic energy to floors, which can create impact damage to the structure of sandwich materials.

Even if there are acceptable, dimensionally small damage limits that do not affect the structural integrity of the helicopter, they require thorough inspections that are costly and ultimately lead to repair or replacement of components. Low speed / low energy impacts, due to handling operations during manufacturing or to dropped tools during maintenance operations, are generally considered. Aeronautical sandwich structures are very sensitive to impact, as they are laminated structures [7].

In order to prevent such undesirable events, it is desired to know the limits of the mechanical properties of sandwich composites.

Thus, in this paper, the technical study focuses mainly on the compression behavior and especially on the compression after impact behavior of the hybrid sandwich composite structure, to define and obtain an optimal structure for floor plates for helicopters composed of CFRP composite sheets and Nomex honeycomb.

2. EXPERIMENTS

Materials

In this study, to obtain sandwich composite structures, Nomex honeycombs were used as a core and HexPly® M18/ 1 prepreg was used for monolithic faces. The development of sandwich composite structures was performed by the autoclave crosslinking technology. The specification of the prepreg is presented in the Table 1.

Table 1. M 18/1 characteristics

M 18/1 characteristics	Value	Unit
Density	1.22	g/cm^3
Glass Transition Temperature Tg Dry	196	˚C
Fiber density	1.78	g/cm^3
Fiber areal weight	160	g/m^2

The prepreg used, HexPly® M18/ 1, has in its component an epoxy matrix with superior properties, with the ability of self-extinguishing, of high performance suitable especially for use in primary aerospace structures.

It has a low moisture absorption at saturation. The laminate has a staking sequence [0/90] with quasi-isotropic characteristics [8, 9].

Processing and testing methods

The manufacture of sandwich composite structures was done by placing the prepreg layers of carbon fiber and Nomex honeycomb according to the specifications of Airbus Helicopter using the autoclave crosslinking technology (fig. 1 and fig. 2).

After making the structures, for mechanical testing, the obtained composite sandwiches were cut to obtain samples with dimensions (fig. 1 and fig. 2) in accordance with ASTM international standards.

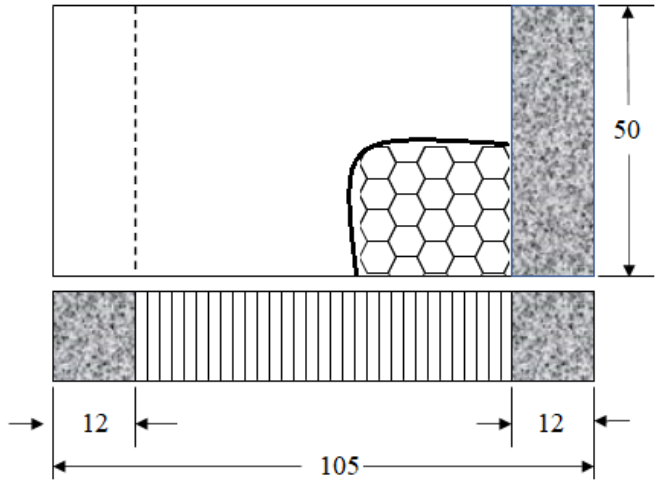

Fig. 1 The shape of samples with dimensions according to ASTM C364/C364M [10]

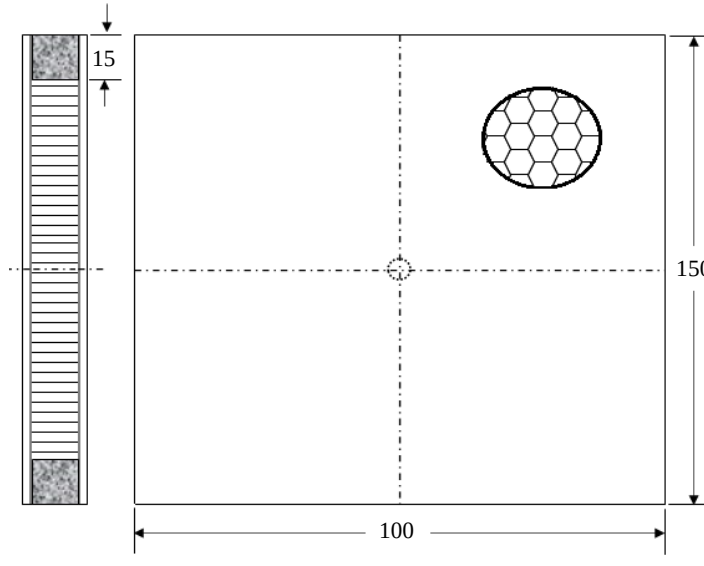

Fig. 2 The shape of samples with dimensions according to ASTM D7137 [11]

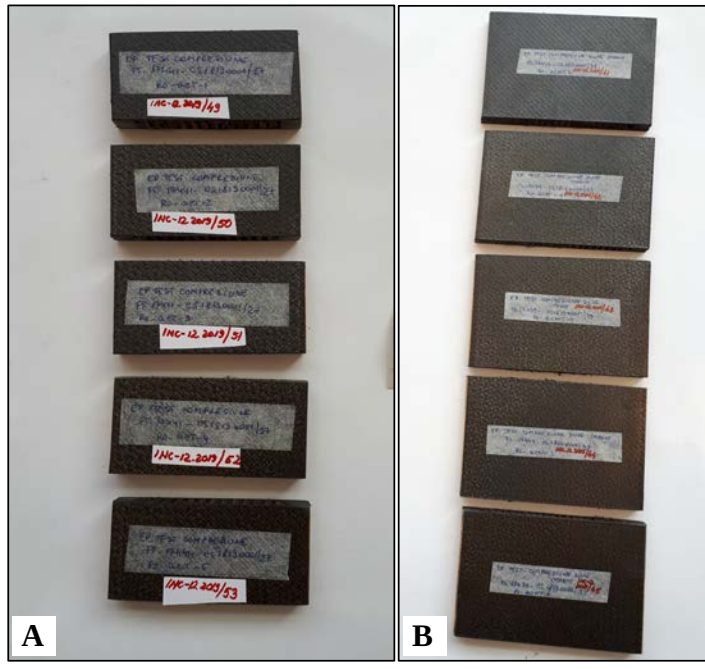

Fig. 3 Sandwich composite samples with dimensions specific to compression (A) and compression after impact (B) tests

After cutting, a number of 5 samples (fig. 3) were prepared for both the compression test and for the compression test after impact, to be tested under ambient temperature conditions.

To evaluate the mechanical properties, the composite sandwich structures were subjected to mechanical testing using the INSTRON 5982 static mechanical testing plant, each test using the special accessory shown in figure 4.

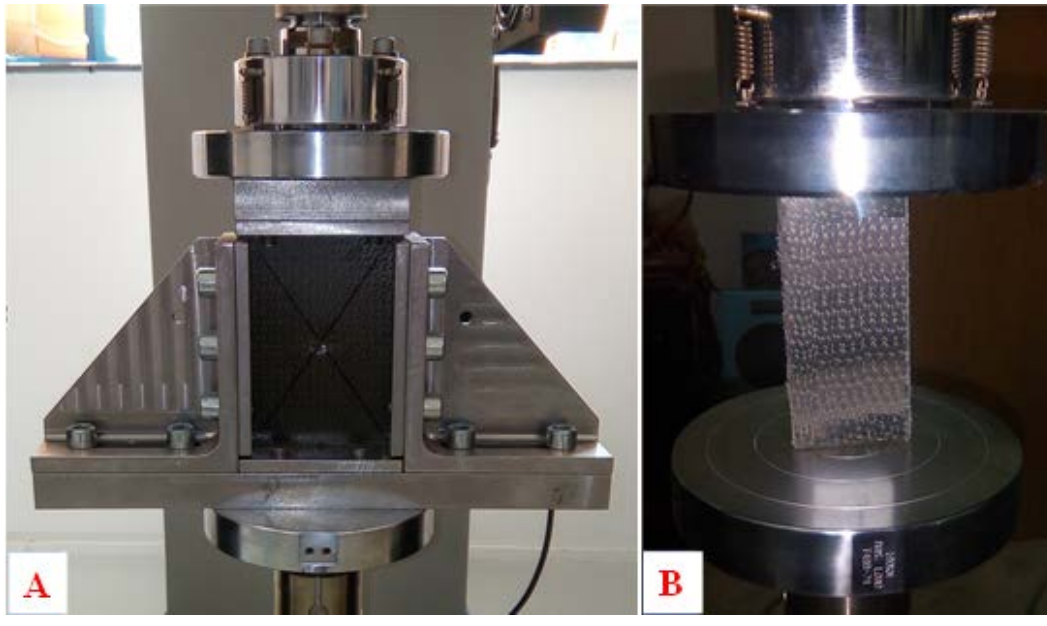

Fig. 4 The accessory of the compression test after impact (A) and the accessory of the compression test (B)

3. RESULTS AND DISCUSSIONS

Compression after impact test

Before the samples were prepared for the compression after impact test, they were subjected to the impact test using an impact energy of 5J. After the impact loading (see fig. 5), the samples were placed in the compression after impact fitting and tested using a test speed of 1.25 mm/min, with a preload of 150N, according to ASTM D 7137M. In fig. 5, it can be seen the median area in which there was an impact and the mode of failure after the compressive stress after impact, respectively.

The mechanical tests consisted in subjecting a group of 5 test pieces made of sandwich composite material both for the compression test and for the compression test after impact.

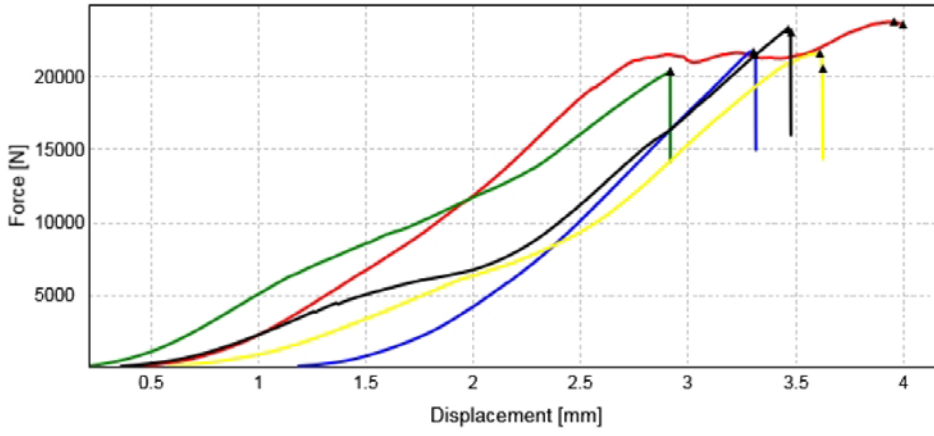

Fig. 5 Compressive after impact strain-stress diagram

For the compression after impact test, according to the standard ASTM D 7137 test method, the test speed used was 1.25 mm/min with a preload of 150N. The results of the mechanical compression after the impact test are illustrated in table 2 and fig. 5.

Table 2. The results of mechanical compression after the impact test

No.	Load [kN]	Modulus [GPa]	Compressive stress [MPa]
1	23.780	1.309	14.689
2	21.772	1.394	13.449
3	20.354	1.036	12.573
4	21.638	1.215	13.349
5	23.162	1.205	14.37
Mean + S.D.	22.162 + 1.37	1.232 + 0.13	13.686 + 0.85

Slightly different values can be observed (table 2) between the five specimens; sample 3 showed lower values in terms of strength and elasticity compared to the other samples.

This difference is most likely due to the processing of the samples during cutting to obtain the sample sizes in accordance with these standards.

Figure 6 shows the untested sandwich composite sample (zone A) in the median area where the impact occurred, and the mode of failure after the compressive stress after impact, respectively.

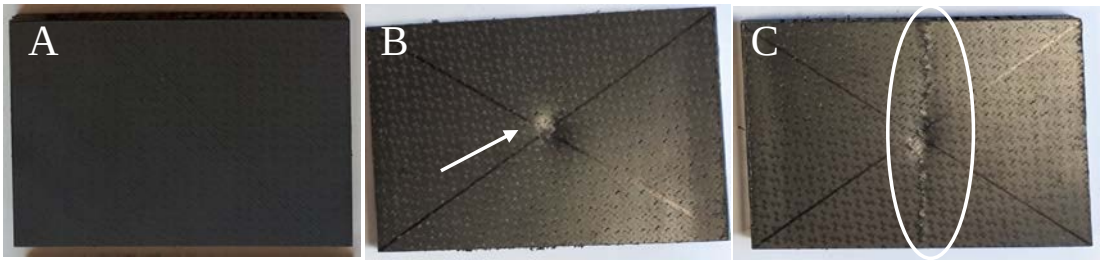

Fig. 6 Sandwich composite specimens: (A) before impact; (B) after impact; (C) after compression after impact testing

The images of the tested specimens illustrate the breakage area after compression after impact testing, and it was observing that the failure modes fit into the accepted ones shown by the testing standards in the samples testing behavior section.

Compression test

For the compression test, according to the standard ASTM C 365M test method, the test speed used was 0.5 mm/min with a preload of 1N. The results of the mechanical compression test are illustrated in table 3 and fig. 7.

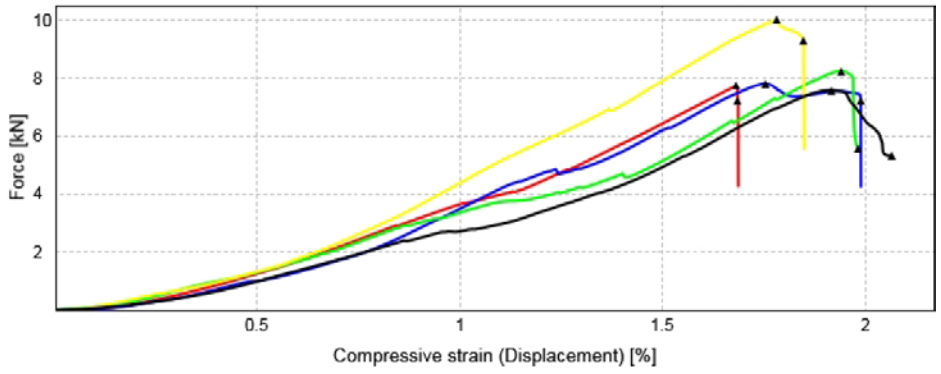

Fig. 7 Compressive strain-stress diagram

Also, in the case of samples tested at compression, slightly different values can be observed (table 3) between the five samples.

Table 3. The results of mechanical compression test

No.	Load [kN]	Modulus [MPa]	Compressive stress [MPa]	Elongation [%]
1	7.731	917	9.858	1.681
2	7.819	881	9.862	1.753
3	8.247	936	10.351	1.941
4	10.012	1005	12.628	1.781
5	7.582	928	9.562	1.916
Mean + S.D.	8.278 ± 1.00	933 ± 40.00	10.452 ± 0.11	1.814 ± 0.11

These slight differences between the results obtained from the compression test are not major; it is not necessary to eliminate a sample from the final mediation of the results.

Figure 8 shows the failure mode following compression testing of sandwich composites.

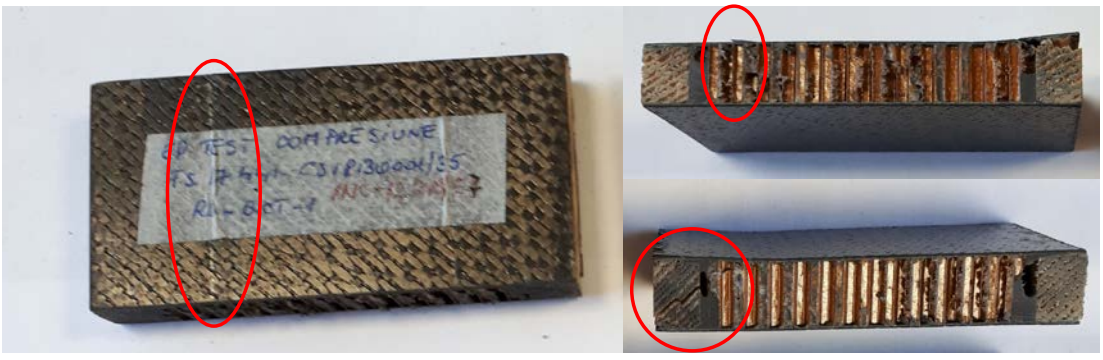

Fig. 8 Types of failure following the compression test of sandwich composite specimens

The breaking area after the compression test on the tested specimens is observed, this area is accepted as a failure mode in accordance with the standard from section of the behavior of the samples after testing.

4. CONCLUSIONS

This paper investigates the mechanical behavior of sandwich composite panels composed of two sides of carbon fiber laminate and Nomex honeycomb core, obtained in the autoclave and developed under the RoRCraft CompAct grant.

Thus, these sandwich composite structures were analyzed from the point of view of the compressive behavior and especially of the compressive behavior after impact.

These mechanical tests are crucial for such materials and have been performed in accordance with ASTM international standards.

For each type of mechanical test, five specimens were tested and slight differences were observed between the values obtained for both the compression test and the compression after the impact test.

These differences are insignificant and are most likely be due to sample processing during cutting to obtain sample sizes in accordance with these standards.

ACKNOWLEDGMENTS

"This work was supported by a grant of the Romanian National Authority Scientific Research and Innovation, CNCS/CCCDI- UEFISCDI, project number PN-III-P3-3.6-H2020-2016-0033, within PNCDI III."

REFERENCES

[1] O. Ley, V. Godinez, *Non-Destructive Evaluation (NDE) of Polymer Matrix Composites*, 2013.

[2] M. Martinez, M. Yanishevsky, B. Rocha, R. M. Groves, N. Bellinger, Maintenance and monitoring of composite helicopter structures and materials, *Innovative Modelling Methods and Intelligent Design Woodhead Publishing Series in Composites Science and Engineering*, Pages 539-578, 2015.

[3] J.-B. Estadieu, L. Tchankova, F. Dering, *Sandwich Panel for An Aircraft*, United States Patent Application Publication, and Pub. No.: US 2016/0297509 A1, 2016.

[4] D. K. Hsu, *Non-Destructive Evaluation (NDE) of Polymer Matrix Composites*, Woodhead Publishing Series in Composites Science and Engineering, Pages 397-422, 2013.

[5] P. Qipao, J. F. Avalos, *Design of all-composite structures using fiber-reinforced polymer (FRP) composites*, Woodhead Publishing Series in Civil and Structural Engineering, Pages 469-508, 2013.

[6] P. W. R. Beaumont, C. Souris and A. Hodi, *Structural Integrity and Durability of Advanced Composites – Innovative Modelling Methods and Intelligent Design*, A volume in Woodhead Publishing Series in Composites Science and Engineering, Book, 2015.

[7] B. Catania, C. Bouvet, M. Gino, Review of composite sandwich structure in aeronautic applications, *Composites Part C: Open Access*, Volume **1**, August 2020.

[8] * * * M 18/1 Datasheet;

[9] A. Stefan, G. Pelin, A. Dragomirescu, A. Petre, S. Ilina, Delamination mechanisms in fiber-reinforced composites structures tested at different loadings, *INCAS BULLETIN*, Volume **12**, Issue 1/ 2020 (P) ISSN 2066-8201, (E) ISSN 2247-4528, pp. 175 – 182, https://doi.org/10.13111/2066-8201.2020.12.1.17

[10] * * * *ASTM C364/ C364M-16, Standard Test Method for Edgewise Compressive Strength of Sandwich Constructions*, ASTM International, West Conshohocken, PA, 2016, www.astm.org, DOI: 10.1520/C0364_C0364M-16;

[11] * * * *ASTM D7137/ D7137M-17, Standard Test Method for Compressive Residual Strength Properties of Damaged Polymer Matrix Composite Plates*, ASTM International, West Conshohocken, PA, 2017, www.astm.org, DOI: 10.1520/D7137_D7137M-17.